Innovative Service Around the Globe YAGEO

# DATA SHEET

## THYRISTOR SURGE SUPPRESSORS
## MODEMS/LINE CARD

PXXXXAA series

**RoHS compliant & Halogen free**

Product specification– December 28, 2018 V.0

# Thyristor Surge Suppressors (TSS) Data Sheet

## Description

DO-214AC Thyristor solid state protection thyristor protect telecommunications equipment such as modems, line cards, fax machines, and other CPE.
P Series devices are used to enable equipment to meet various regulatory requirements including GR 1089, ITU K.20, K.21 and K.45, IEC 60950, UL 60950, and TIA-968 (formerly known as FCC Part 68).

## Features

Compared to surge suppression using other technologies, P Series devices offer absolute surge protection regardless of the surge current available and the rate of applied voltage (dv/dt). P Series devices:

- Cannot be damaged by voltage
- Eliminate hysteresis and heat dissipation typically found with clamping devices
- Eliminate voltage overshoot caused by fast-rising transients
- Are non-degenerative
- Will not fatigue
- Have low capacitance, making them ideal for high-speed transmission equipment
- Meets MSL level 1, per J-STD-020
- Safety certification: UL: E244458

## Electrical Parameters

| Parameter | Definition |
|---|---|
| $V_{DRM}$ | **Peak Off-state Voltage –** maximum voltage that can be applied while maintaining off state |
| $V_S$ | **Switching Voltage –** maximum voltage prior to switching to on state |
| $V_T$ | **On-state Voltage –** maximum voltage measured at rated on-state current |
| $I_{DRM}$ | **Leakage Current –** maximum peak off-state current measured at $V_{DRM}$ |
| $I_S$ | **Switching Current –** maximum current required to switch to on state |
| $I_T$ | **On-state Current –** maximum rated continuous on-state current |
| $I_H$ | **Holding Current –** minimum current required to maintain on state |
| $C_O$ | **Off-state Capacitance –** typical capacitance measured in off state |
| $I_{PP}$ | **Peak Pulse Current –** maximum rated peak impulse current |
| $I_{TSM}$ | **Peak One-cycle Surge Current –** maximum rated one-cycle AC current |
| di/dt | **Rate of Rise of Current –** maximum rated value of the acceptable rate of rise in current over time |

## Electrical Characteristics

| Part Number | $V_{DRM}$ (V) | $V_S$ (V) | $V_T$ (V) | $I_{DRM}$ (μA) | $I_S$ (mA) | $I_T$ (A) | $I_H$ (mA) | $C_O$ (pF) | Marking |
|---|---|---|---|---|---|---|---|---|---|
| P0080AA | 6 | 25 | 4 | 5 | 800 | 2.2 | 50 | 30 | P008A |
| P0300AA | 25 | 40 | 4 | 5 | 800 | 2.2 | 50 | 30 | P03A |
| P0640AA | 58 | 77 | 4 | 5 | 800 | 2.2 | 150 | 30 | P06A |
| P0720AA | 65 | 88 | 4 | 5 | 800 | 2.2 | 150 | 25 | P07A |
| P0900AA | 75 | 98 | 4 | 5 | 800 | 2.2 | 150 | 25 | P09A |
| P1100AA | 90 | 130 | 4 | 5 | 800 | 2.2 | 150 | 25 | P11A |
| P1300AA | 120 | 160 | 4 | 5 | 800 | 2.2 | 150 | 25 | P13A |
| P1500AA | 140 | 180 | 4 | 5 | 800 | 2.2 | 150 | 25 | P15A |
| P1800AA | 170 | 220 | 4 | 5 | 800 | 2.2 | 150 | 25 | P18A |
| P2300AA | 190 | 260 | 4 | 5 | 800 | 2.2 | 150 | 25 | P23A |
| P2600AA | 220 | 300 | 4 | 5 | 800 | 2.2 | 150 | 25 | P26A |
| P3100AA | 275 | 350 | 4 | 5 | 800 | 2.2 | 150 | 25 | P31A |
| P3500AA | 320 | 400 | 4 | 5 | 800 | 2.2 | 150 | 25 | P35A |

Notes:

- All measurements are made at an ambient temperature of 25℃. $I_{PP}$ applies to -40℃ through +85℃ temperature range.
- Off-state capacitance($C_O$) is measured at 1 MHz with a 2V bias and is typical value.
- For surge ratings, see table below.

## Surge Ratings

| Series | $I_{PP}$ 2×10μs (A) | $I_{PP}$ 8×20μs (A) | $I_{PP}$ 10×160μs (A) | $I_{PP}$ 10×560μs (A) | $I_{PP}$ 10×1000μs (A) | $I_{TSM}$ 60Hz (A) | di/dt (A/μs) |
|---|---|---|---|---|---|---|---|
| A | 150 | 120 | 60 | 35 | 30 | 15 | 500 |

## Thermal Considerations

| Package DO-214AC/SMA | Symbol | Parameter | Value | Unit |
|---|---|---|---|---|
| | $T_J$ | Operating Junction Temperature | -40 to +150 | ℃ |
| | $T_S$ | Storage Temperature Range | -40 to +150 | ℃ |
| | $R_{\theta JA}$ | Junction to Ambient on printed circuit | 90 | ℃/W |

## Part Number Code and Marking

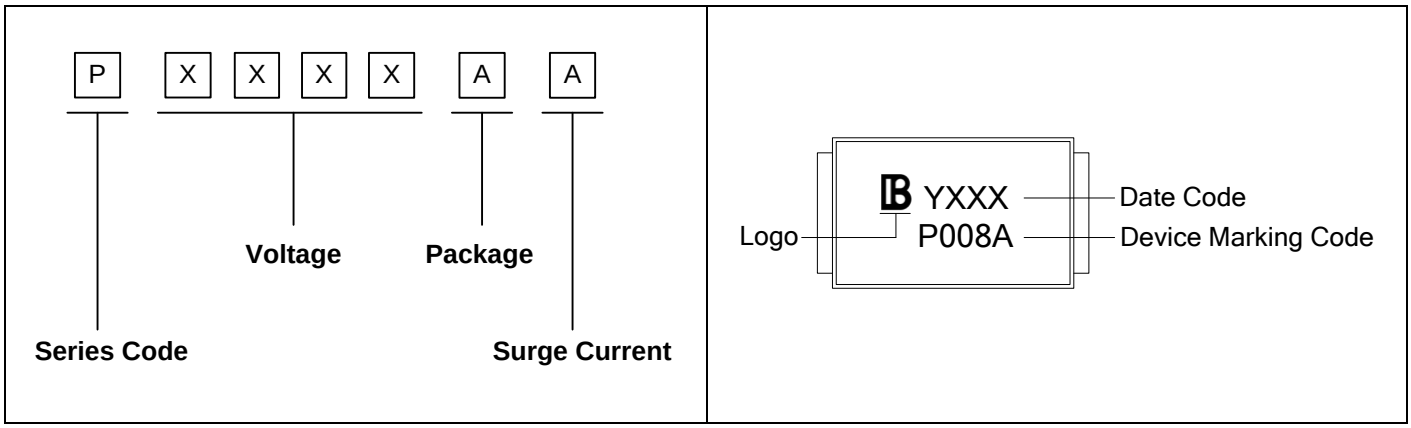


## Characteristics Curves

Figure 1. V-I Characteristics

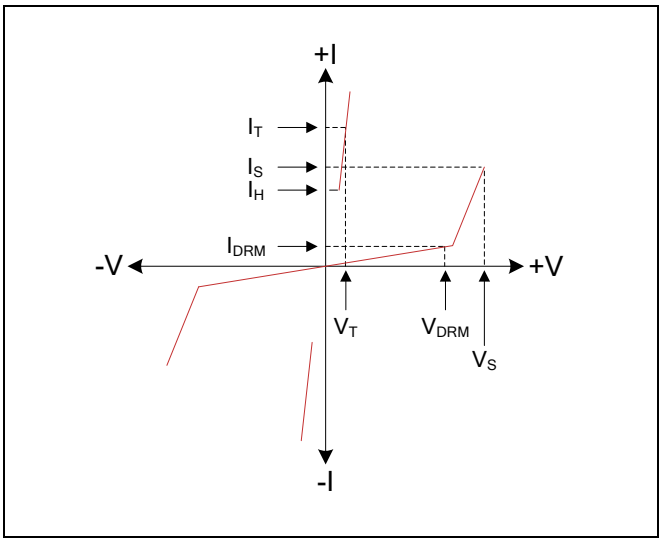


Figure 2. tr × td Pulse Wave-form

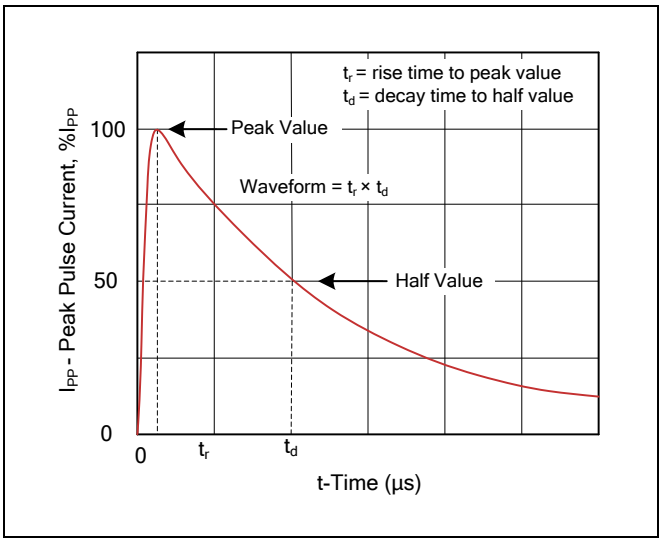


Figure 3. Normalized Vs Change versus Junction Temperature

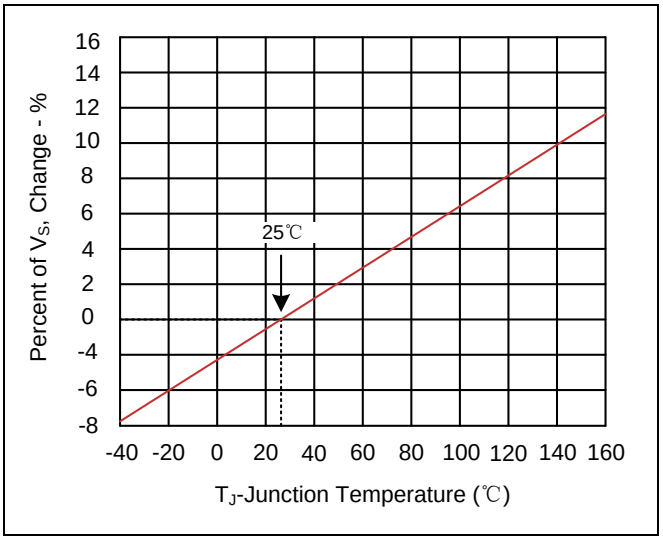


Figure 4. Normalized DC Holding Current versus Case Temperature

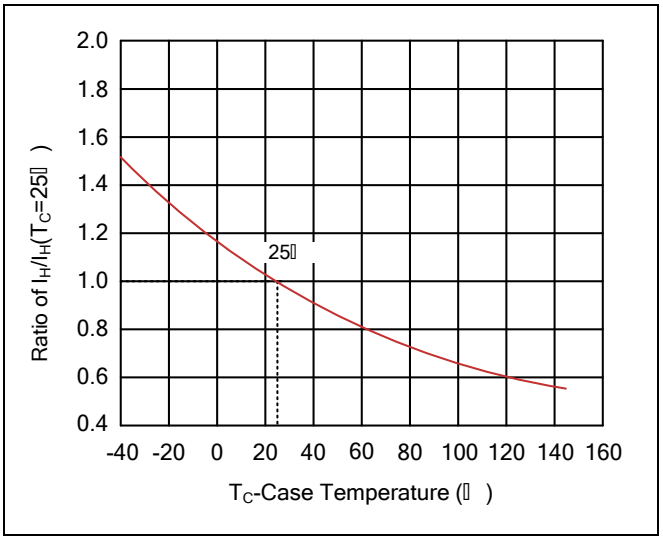

## Recommended Soldering Conditions

Reflow Soldering

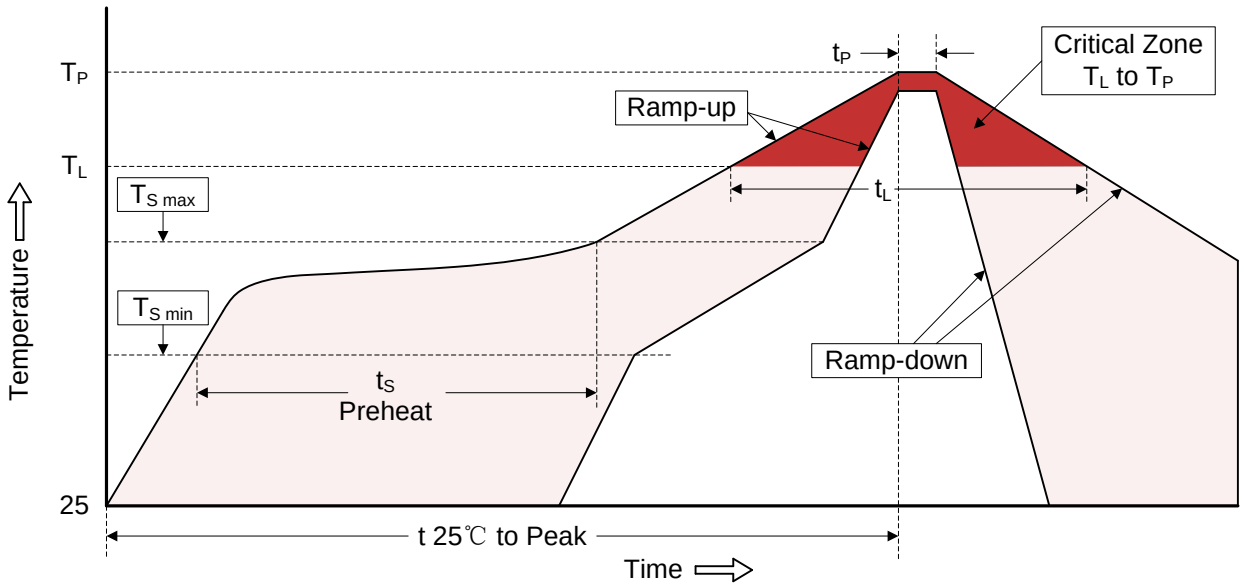


Recommended Conditions

| Profile Feature | Pb-Free Assembly |
|---|---|
| Average ramp-up rate ($T_L$ to $T_P$) | 3℃/second max. |
| Preheat<br>-Temperature Min ($T_{S\ min}$)<br>-Temperature Max ($T_{S\ max}$)<br>-Time (min to max) ( $t_S$) | <br>150℃<br>200℃<br>60-180 seconds |
| $T_{S\ max}$ to $T_L$<br>-Ramp-up Rate | <br>3℃/second max. |
| Time maintained above:<br>-Temperature ($T_L$)<br>-Time ($t_L$) | <br>217℃<br>60-150 seconds |
| Peak Temperature ($T_P$) | 260℃ |
| Time within 5℃ of actual Peak Temperature ($t_P$) | 20-40 seconds |
| Ramp-down Rate | 6℃/second max. |
| Time 25℃ to Peak Temperature | 8 minutes max. |

## Dimensions (SMA/DO-214AC)

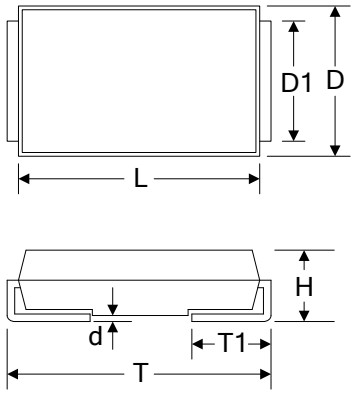


| Symbol | Millimeters | | Inches | |
|---|---|---|---|---|
| | Min. | Max. | Min. | Max. |
| L | 3.99 | 4.50 | 0.157 | 0.177 |
| D | 2.54 | 2.79 | 0.100 | 0.110 |
| D1 | 1.25 | 1.65 | 0.049 | 0.065 |
| T | 4.93 | 5.28 | 0.194 | 0.208 |
| T1 | 0.76 | 1.52 | 0.030 | 0.060 |
| d | - | 0.203 | - | 0.008 |
| H | 2.00 | 2.50 | 0.079 | 0.098 |

## Packaging

Tape

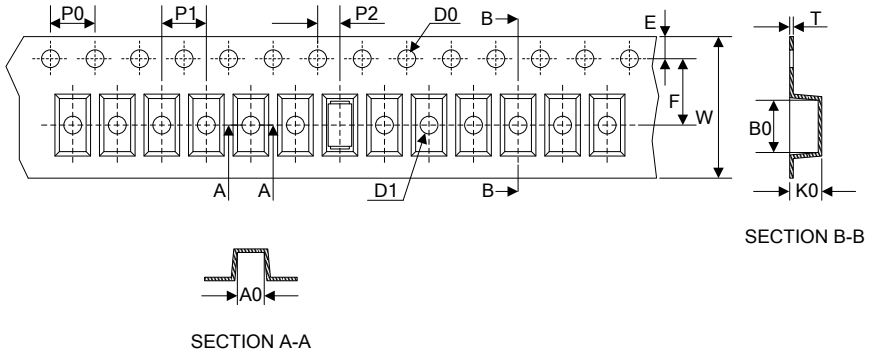


| Symbol | Dimension (mm) |
|---|---|
| W | 12.00±0.20 |
| P0 | 4.00±0.10 |
| P1 | 4.00±0.10 |
| P2 | 2.00±0.10 |
| D0 | Φ1.50±0.10 |
| D1 | Φ1.50±0.10 |
| E | 1.75±0.10 |
| F | 5.50±0.10 |
| A0 | 2.79±0.10 |
| B0 | 5.33±0.10 |
| K0 | 2.55±0.10 |
| T | 0.25±0.05 |

Reel

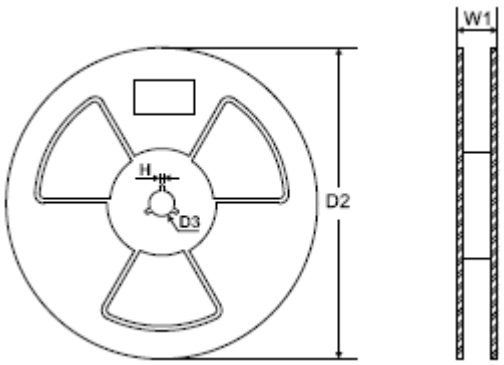


| | |
|---|---|
| D2 | Φ330.0±2.0 |
| D3 | Φ13.5±0.5 |
| H | 2.5±0.5 |
| W1 | 16.0±1.0 |

Quantity: 5000PCS