TENTATIVE

Control IC Product Specifications

All rights reserved, Copyright © Fujitsu Component Limited (FCL) 2005

					TITLE Control IC Product Specifications
					DRAW. NO. CUST Tech Bes F&T - I0565
EDIT	DATE	DESIG.	CHECK	DESCRIPTION	Fujitsu Component Limited
DESIG.	20050707	K.Yoshifusa	CHECK	T.Nakajima	APPR. K.Nishimura

SHEET 1 / 26

TENTATIVE

Contents

Control IC Product Specifications

1. Scope

This specification applies to the control IC of FCL Touch-panel.

[Drawing No.] Control IC : N010-0559-V044 (Pb Free of N010-0558-V043)

2. Summary

The Control IC and the FCL Touch-panel converts a input position to a coordinate value with a pen or a finger. Then it outputs the coordinate value to external devices through the PS/2 interface.

The shading in the following block diagram indicates the control IC.

[Block diagram]

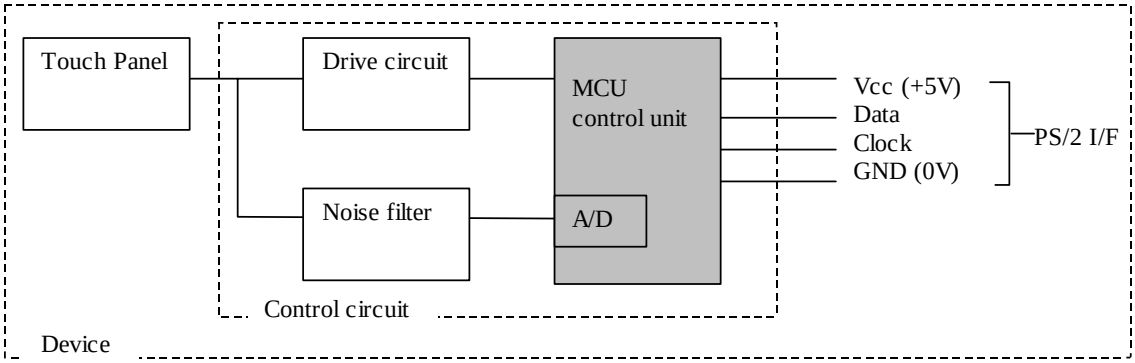

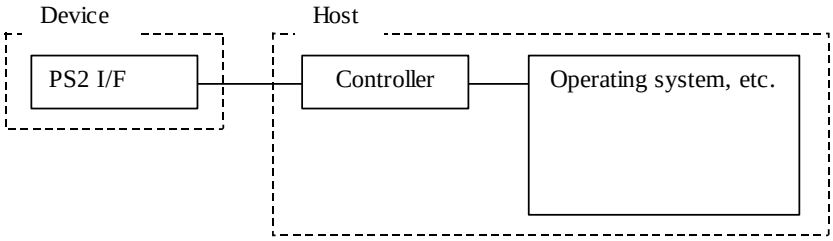

3. External View

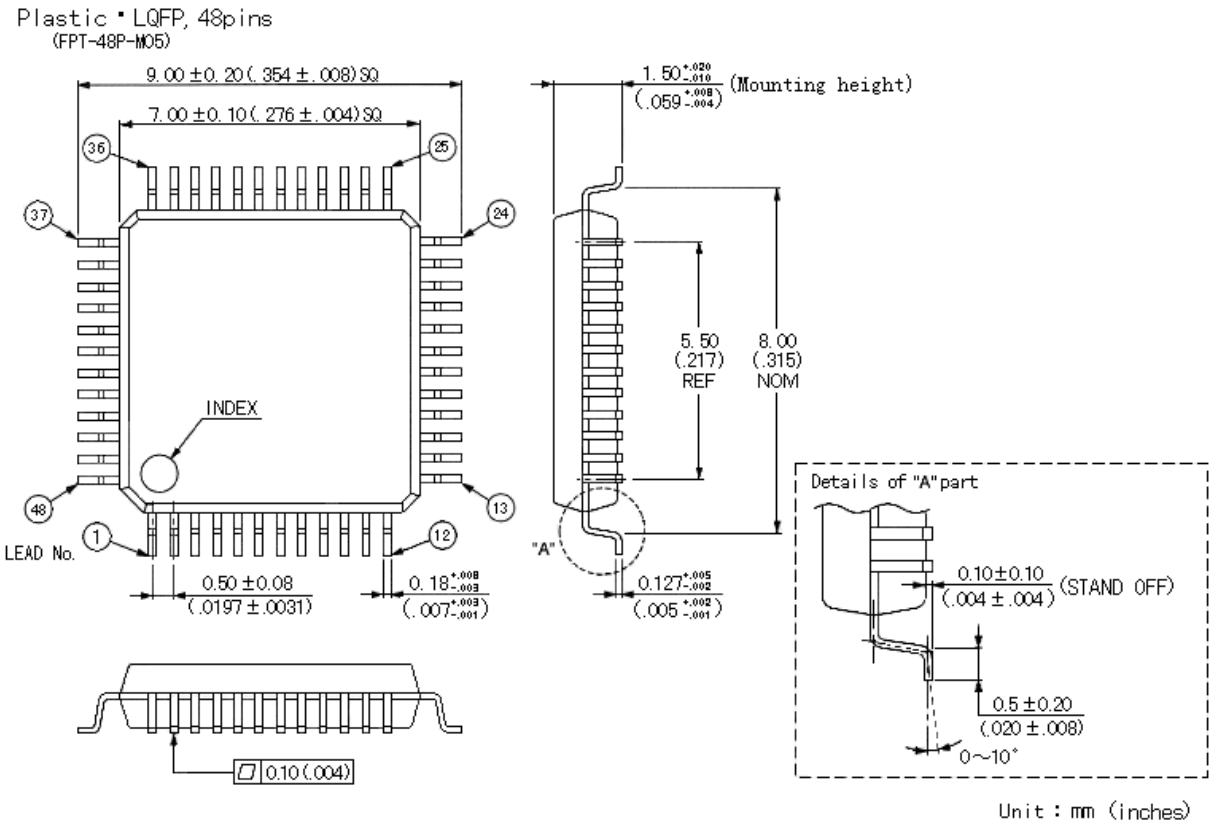

4. Setting the Origin Point

The origin point can be set up at any corner using the JUMPER1 to JUMPER3.

JUMPER1 (21 pin)	H	The x and y coordinates are switched with each other.
	L	The x and y coordinates are output as is.
JUMPER2 (20 pin)	H	The x coordinate is output after being reversed.
	L	The x coordinate is output as is.
JUMPER3 (18 pin)	H	The y coordinate is output after being reversed.
	L	The y coordinate is output as is.

5. Electrical Characteristics

5.1 Absolute Maximum Ratings

(AVss=Vss=0V)

Parameter	Symbol	Rating		Unit	Remarks
		Min.	Max.		
Power supply voltage	Vcc AVcc	Vss-0.3	Vss+6.0	V	*1
	AVR	Vss-0.3	Vss+6.0	V	
Input voltage	V_I	Vss-0.3	Vcc+0.3	V	Pins other than P44 and P45
		Vss-0.3	Vss+6.0	V	P44, P45
Output voltage	V_O	Vss-0.3	Vcc+0.3	V	Pins other than P44 and P45
		Vss+0.3	Vss+6.0	V	P44, P45
Maximum output current at "L" level	I_{OL}	—	15	mA	
Average output current at "L" level	I_{OLAV}	—	4	mA	Average (operating current × operating ratio)
Total maximum output current at "L" level	ΣI_{OL}	—	100	mA	
Total average output current at "L" level	ΣI_{OLAV}	—	40	mA	Average (operating current × operating ratio)
Maximum output current at "H" level	I_{OH}	—	-15	mA	
Average output current at "H" level	I_{OHAV}	—	-4	mA	Average (operating current × operating ratio)
Total maximum output current at "H" level	ΣI_{OH}	—	-50	mA	
Total average output current at "H" level	ΣI_{OHAV}	—	-20	mA	Average (operating current × operating ratio)
Power consumption	P_D	—	300	mW	
Operating temperature	Ta	-40	+85	°C	
Storage temperature	Tstg	-55	+150	°C	

*1 Use AVcc and Vcc with the same supply voltage.

Be careful to keep AVR up to the value AVcc + 0.3.

Note:

Exceeding the absolute maximum ratings may cause permanent damage to the LSI device. As for normal operation, the LSI should be used under the recommended operating conditions. The use outside the recommended operating conditions may affect the reliability of the LSI device.

5.2 Recommended Operating Conditions

(AVss=Vss=0V)

Parameter	Symbol	Rating		Unit	Remarks
		Min.	Max.		
Power supply voltage	Vcc	3.5	5.5	V	Range guaranteed for normal operation
	AVcc	3.0	5.5	V	RAM status at stop
	AVR	2.4	AVcc	V	
Operating temperature	Ta	-40	+85	°C	

5.3 DC Ratings

(AVcc=Vcc=5.0V, AVss=Vss=0V, Ta=-40°C to +85°C)

Parameter	Symbol	Pin	Condition	Specifications			Unit	Remarks
				Min.	Typ.	Max.		
Input voltage at "H" level	V_{IH}	18, 20 to 34 36 to 40 pin	—	0.7Vcc	—	Vcc+0.3	V	
	V_{IHS}	2 to 4 24 to 34 37, 38, 40 pin	—	0.8Vcc	—	Vcc+0.3	V	
	V_{IHSMB}	41, 42 pin	—	Vss+1.4	—	Vss+5.5	V	With SMB input buffer selected
	V_{IH12C}		—	0.7Vcc	—	Vss+5.5	V	With I^2C input buffer selected
Input voltage at "L" level	V_{IL}	18, 20 to 34 36 to 40 pin	—	Vss-0.3	—	0.3Vcc	V	
	V_{ILS}	2 to 4, 24 to 34 37, 38, 40 pin	—	Vss-0.3	—	0.2Vcc	V	
	V_{ILSMB}	41, 42 pin	—	Vss-0.3	—	Vss+0.6	V	With SMB input buffer selected
	V_{IL12C}		—	Vss-0.3	—	0.3Vcc	V	With I^2C input buffer selected
Applied voltage of open drain output	V_{D1}	45 to 48 pin	—	Vss-0.3	—	Vcc+0.3	V	
	V_{D2}	41, 42 pin		Vss-0.3	—	Vss+5.5	V	

(continued)

(AVcc=Vcc=5.0V, AVss=Vss=0V, Ta=-40°C to +85°C)

Parameter	Symbol	Pin	Condition	Specifications			Unit	Remarks
				Min.	Typ.	Max.		
Output voltage at "H" level	V_{OH}	10 to 18, 20 to 34, 36 to 40 pin	I_{OH}=2.0mA Vcc=4.5V	4.0	—	—	V	
Output voltage at "L" level	V_{OL1}	10 to 18, 20 to 34, 36 to 42, 45 to 48 pin	I_{OL}=4.0mA V_{CC}=4.5V	—	—	0.4	V	
	V_{OL2}	2 pin		—	—	0.6	V	
Input reverse current (high-impedance output reverse current)	I_{L1}	3, 4, 10 to 18 20 to 34 36 to 40 pin	0.0.V<V_I<V_{CC}	-5	—	+5	µA	With absence of pull-up resistor specified
Reverse current of open drain output	I_{LIOD}	41, 42 45 to 48 pin	0.0V<V_I<V_{SS}+5.5V	—	—	+5	µA	
Pull-up resistor value	R_{PULL}	2, 10 to 18 20 to 34 36 to 40 pin	V_I=0.0V	25	50	100	kΩ	With pull-up resistor specified *RST excluded
Vcc Supply current	I_{CC}	7 pin	F_C=10.0MHz	—	13	26	mA	
	I_{CCS}			—	3	8	mA	Sleep mode
	I_{CCH}		Ta=+25°C	—	5	10	µA	
AVcc Supply current	I_A	1 pin	F_C10.0MHz	—	1	3	mA	With analog-to-digital converter operating
	I_{AH}		Ta=+25°C	—	1	5	µA	With analog-to-digital converter stopped
Input capacitance	C_{IN}	Pins other than pins 1, 7, 19, and 43	f=1MHz	—	10	—	pF	

5.4 AC Ratings

(1) Reset timing

(AVcc=Vcc=5.0V, AVss=Vss=0V, Ta=-40°C to +85°C)

Parameter	Symbol	Condition	Specifications		Unit	Remarks
			Min.	Max.		
RST "L" pulse duration	t_{ZLZH}	—	$48t_{HCLY}$	—	ns	

Note:

t_{HCLY} is the oscillation cycle of the main clock.

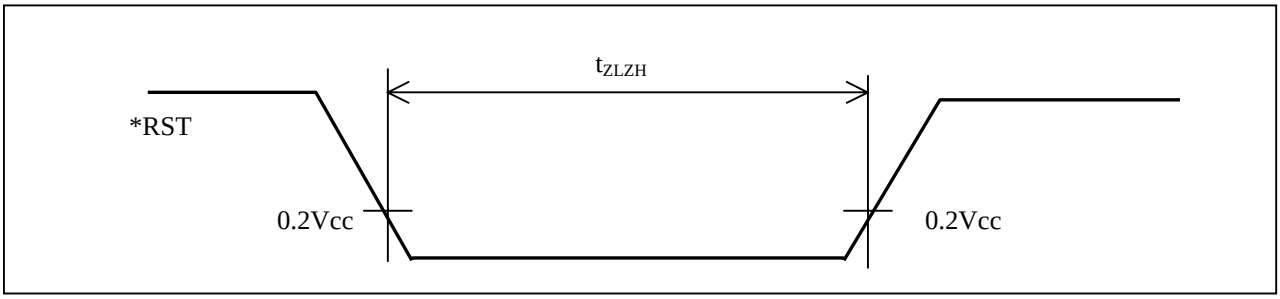

(2) Power-on reset

(AVss=Vss=0V, Ta=-40°C to +85°C)

Parameter	Symbol	Condition	Specifications		Unit	Remarks
			Min.	Max.		
Power-on time	t_R	—	0.5	50	ms	
Power-off time	t_{OFF}		1	—	ms	For repetitive operation

Note : Please start a power supply within the selected oscillation time. Moreover, when changing power supply voltage during operation, We recommend starting power supply voltage smoothly. Power supply voltage should rise from less than [0.2V]. When voltage becomes more than 0.2V in the time of the reboot by the enter end of a power supply etc., please put in a reset signal from the exterior.

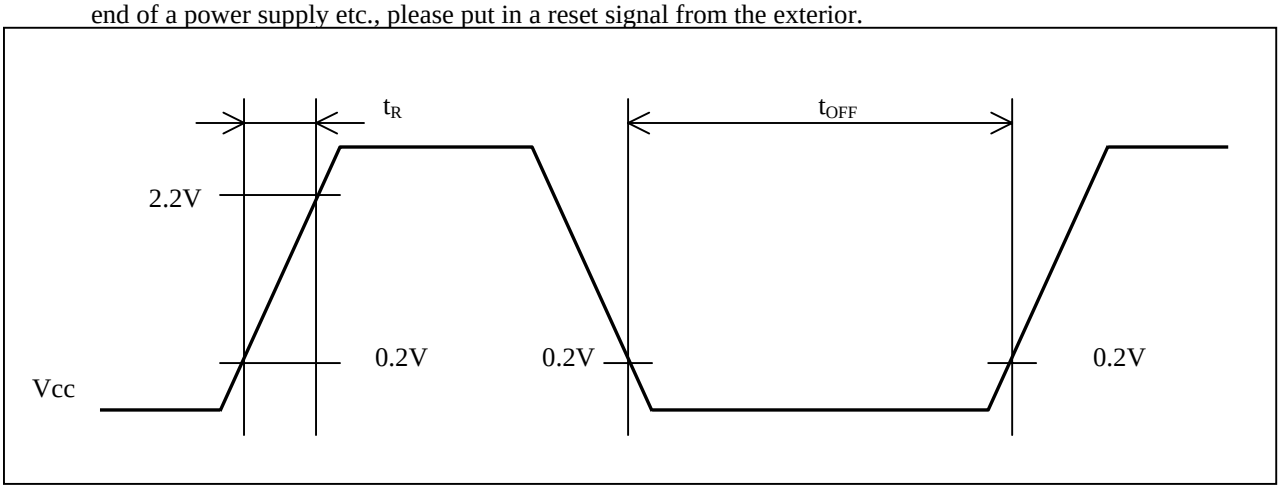

(3) Clock timing specifications

(AVss=Vss=0V, Ta=-40°C to +85°C)

Parameter	Symbol	Pin	Condition	Specifications			Unit	Remarks
				Min.	Typ.	Max.		
Clock frequency	F_{CH}	X0, X1	—	1	—	12.5	MHz	Main clock
Clock cycle time	t_{HCYL}	X0, X1		80	—	1000	ns	Main clock
Pulse duration of input clock	P_{WH} P_{WL}	X0		20	—	—	ns	External clock
Rise and fall time of input clock	t_{CR} t_{CF}	X0		—	—	10	Ns	External clock

・X0 and X1 timing and application conditions

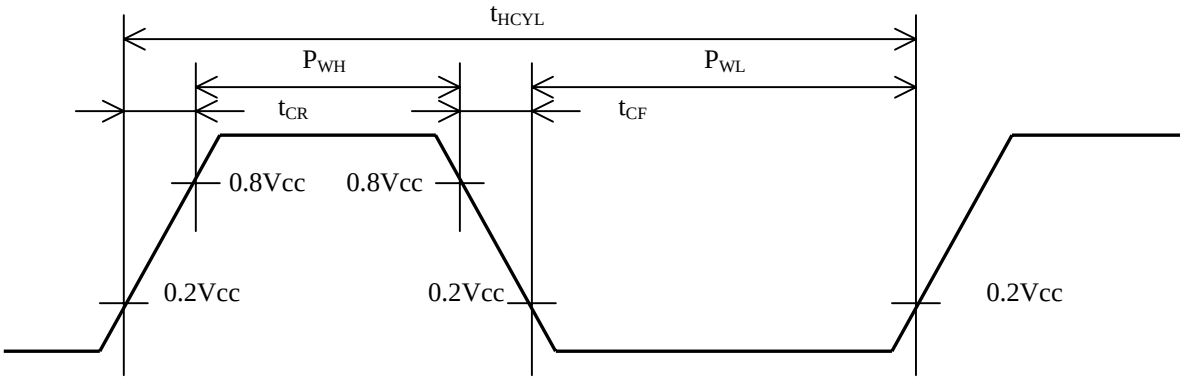

・Clock input condition

With a quartz crystal unit or ceramic resonator

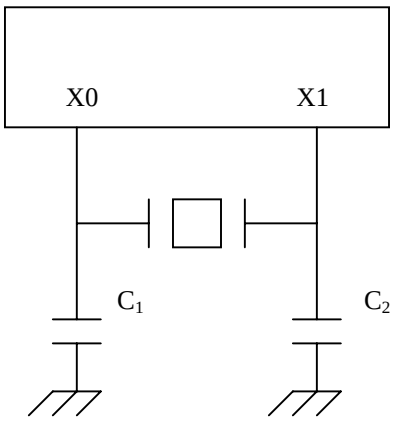

With a external clock

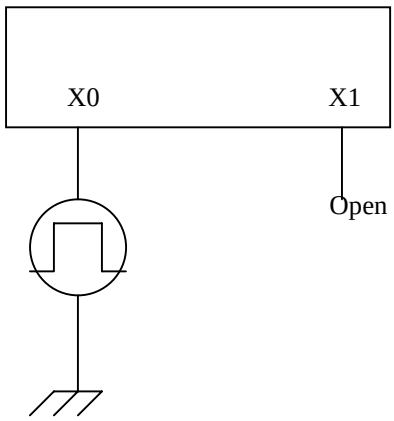

5.5 Electrical Characteristics of A/D Converter

(AVcc=Vcc=5.0V, AVss=Vss=0V, TA=-40°C to +85°C)

Parameter	Symbol	Condition	Specifications			Unit	Remarks
			Min.	Typ.	Max.		
Total precision	—	AVR=AVcc	—	—	±5.0	LSB	

6. Input and Output Pins and their Functions

6.1 Pin Assignment Diagram

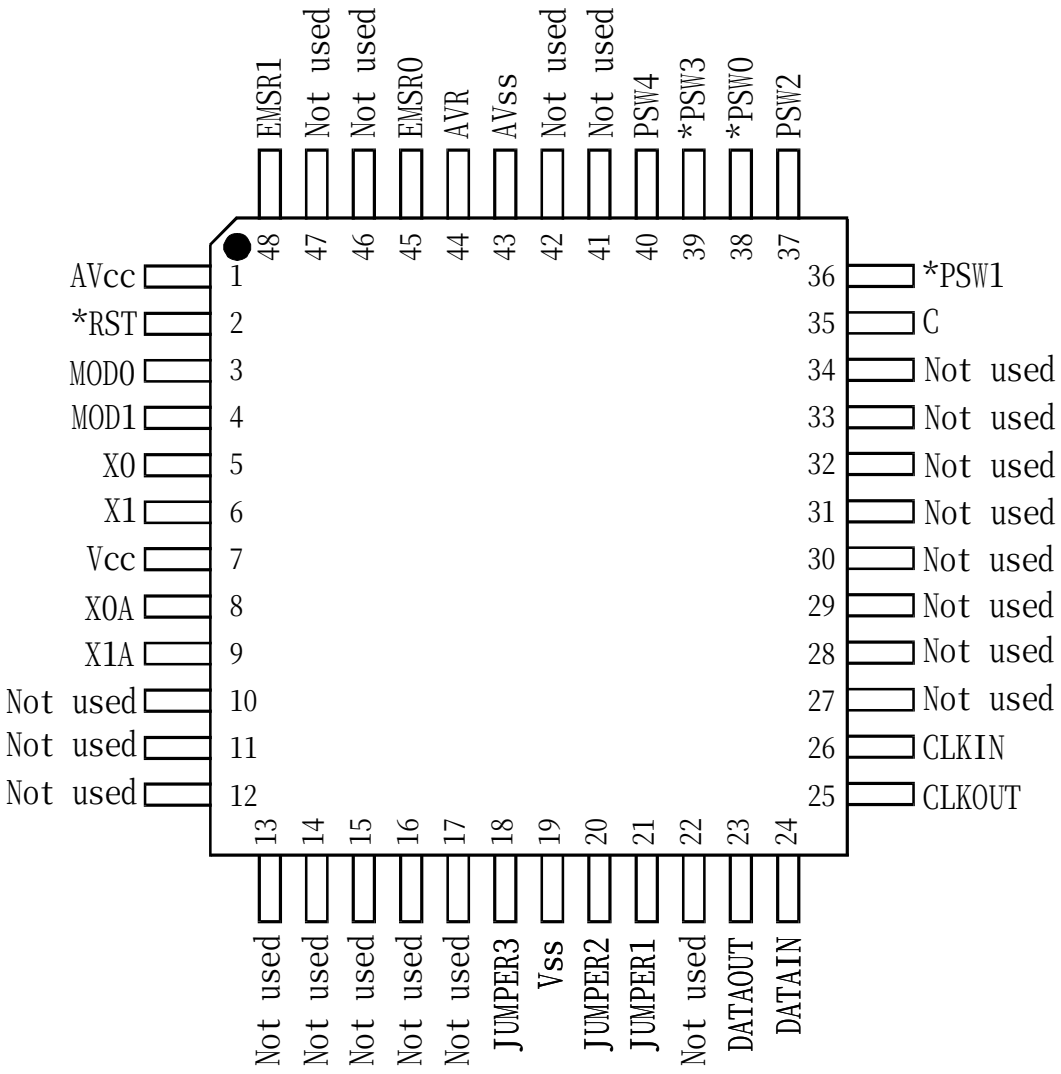

6.2 List of Input and Output Pins

(The column "I/O" indicates input or output with respect to the MCU.)

Pin no.	Pin name	I/O	Function outline
1	AVcc	—	Power supply to the analog-to-digital converter
2	*RST	I	Input for reset
3, 4	MOD0, MOD1	I	Input for operation mode specification (Must be connected to Vss.)
5	X0	I	Input for oscillation (Main clock: 10 MHz)
6	XI	O	Output for oscillation (Main clock: 10 MHz)
7	Vcc	—	Digital power source
8	X0A	I	Input for oscillation (Sub-clock must be connected directly to Vss.)
9	X1A	O	Input for oscillation (Sub-clock must be open.)
10 to 17	—	—	Not used (Must be open.)
18	JUMPER3	I	Origin selection
19	Vss	—	Digital power source (GND)
20	JUMPER2	I	Origin selection
21	JUMPER1	I	Origin selection
22	—	—	Not used (Must be open.)
23	DATAOUT	O	Output for PS/2 data
24	DATAIN	I	Input for PS/2 data
25	CLKOUT	O	Output for PS/2 clocks
26	CLKIN	I	Input for PS/2 clocks
27 to 34	—	—	Not used (Must be open.)
35	C	—	Capacity of power regulation (0.1 µF ceramic capacitor be connected.)
36	*PSW1	O	Output for panel drive switch control
37	PSW2	O	Output for panel drive switch control
38	*PSW0	O	Output for panel pull-up resistor switch control
39	*PSW3	O	Output for panel drive switch control
40	PSW4	O	Output for panel drive switch control
41, 42	—	—	Not used (Must be open.)
43	AVss	—	Power supply to analog-to-digital converter (Must be used with same electric voltage source as Vss.)
44	AVR	—	Input for reference voltage of analog-to-digital converter
45	EMSR0	I	Panel voltage measurement
46, 47	—	—	Not used (Must be open.)
48	EMSR1	I	Panel voltage measurement

Note: Open pins must not be used for relaying signals.

6.3 Details of Pins

1) *RST
   - Pin for resetting MCU hardware.
   - This control IC has built-in internal power-on reset circuit. When the power if turned on and oscillation stabilizes, the circuit starts operation.
   - When the control IC is reset from external unit, input a Low signal of a 48-clock cycles or more. (0.1 μs × 48 = 4.8μs)
2) MOD0 and MOD1
   - Pins for setting the reset vector fetch mode in the MCU. These pins are connected to Vss
3) X0 and X1
   - Pins for connecting a resonator or external clock.
4) X0A and X1A
   - X0A and X1A are used to connect a piezoelectric resonator or external sub-clock. X0A must be connected directly to Vss, and X1A must be open.
5) JUMPER1 to JUMPER3
   - Pins for setting the origin point of the output coordinates.
6) DATAOUT
   - This pin is used to output PS/2 data to the main unit
7) DATAIN
   - This pin is used to input PS/2 data from the main unit.
8) PSW1 to PSW4
   - Pins for controlling the transistor that is used to supply voltage to the Touch-panel.
9) PSW0
   - Pin for controlling the transistor that turns on the pull-up resistance or off while the controller is waiting for the Panel to be touched.
10) ENSR0 and ENSR1
   - Pins for measuring the voltage at the point where the Panel is touched.
   - Voltages applied to this pin are A/D converted in the controller to output the coordinate. Therefore, pay attention to noise.

7. Interface

7.1 Signal Lines

Signal name	Signal direction Device - Host	Description
Clock	←	Send-disabled request
	→	Synchronous clock for transmission and reception
Data	←	Receive request or receive data
	↔	Transmission data
Vcc	←	Power supply (+5 Vdc)
GND	→	Ground (0 V)

7.2 Details of Signal Line

(1) Clock line

The clock line is used as a synchronous clock for data transmission and reception. The device generates the clock line for this function.

Other function, the host sets whether transmission is enabled or disabled.

The host can disable data transmission from the device at any time by keeping the clock line at the Low level when it cannot receive data from the device for some reason. However, if the host has already confirmed that the clock of bit 10 has been generated during data reception, it must complete reception without setting the clock line to Low.

After data transmission is interrupted by detection of the Low level of the clock line, the device starts retransmission from the interrupted byte. The host must return the clock line to High as soon as possible after it disables transmission during packet transmission.

(2) Data line

The data line is used to transmit data from the device.

As a separate function, the host requests the device to receive data.

The host can request the device to receive data by keeping the data line at the Low level when it must transmit data to the device for some reason. The host must disable data transmission using the clock line before handling a reception request.

After the device detects the Low level of the data line and the clock is returned to High by the host, it regards this state as the start of data reception and generates the clock.

Clock Line	Data Line	Device status
H	H	Communication enabled
L	H	Communication disabled
L	L	Preparing to receive data
H	L	Starting to receive data

7.3 Communication Protocol

Transfer system	Synchronous serial, LSB fast
Data input-output speed	About 12,500 bps
Start bit	Low-level 1 bit
Stop bit	High-level 1 bit
Data length	8 bits (1 byte), positive logic
Parity	Odd parity bit: High with even data, and low with odd data

7.4 Input and Output Waveforms

(1) When transmitting data from the device side to the host side.

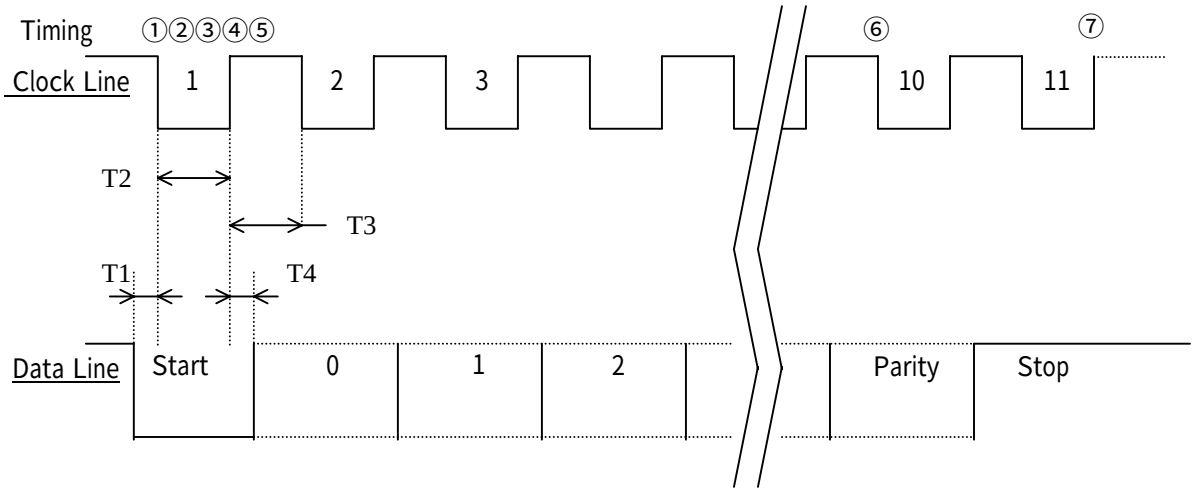

T1: 5 to 25 us = Delay time until clock generation

T2: 30 to 50 us = Hold time during which clock is kept Low

T3: 30 to 50 us = Hold time during which clock is kept High

T4: 5 to T3 - 5 us = Delay time from clock Low to data operation

① The device checks that both the data line and clock line are High. The device then sets the data line to Low to prepare for generating a start bit.

② The device sets the clock line to Low and asks the host to check for the beginning of the start bit.

③ The host checks for the Low level (start bit).

④ The device sets the clock line to High and indicates completion of the start bit.

⑤ The device uses the data line to generate data bits.

⑥ When the clock line is High, the device can complete data transmission.

⑦ The last time the clock line goes High, transmission of one byte of data is complete.

The device always monitors the level of the clock line while steps 1 to 6 are occurring.

The device monitors the clock line while the device keeps the clock line High. If the clock line is still Low, the device assumes that data transmission is disabled.

(2) When transmitting data from the host side to the device side.

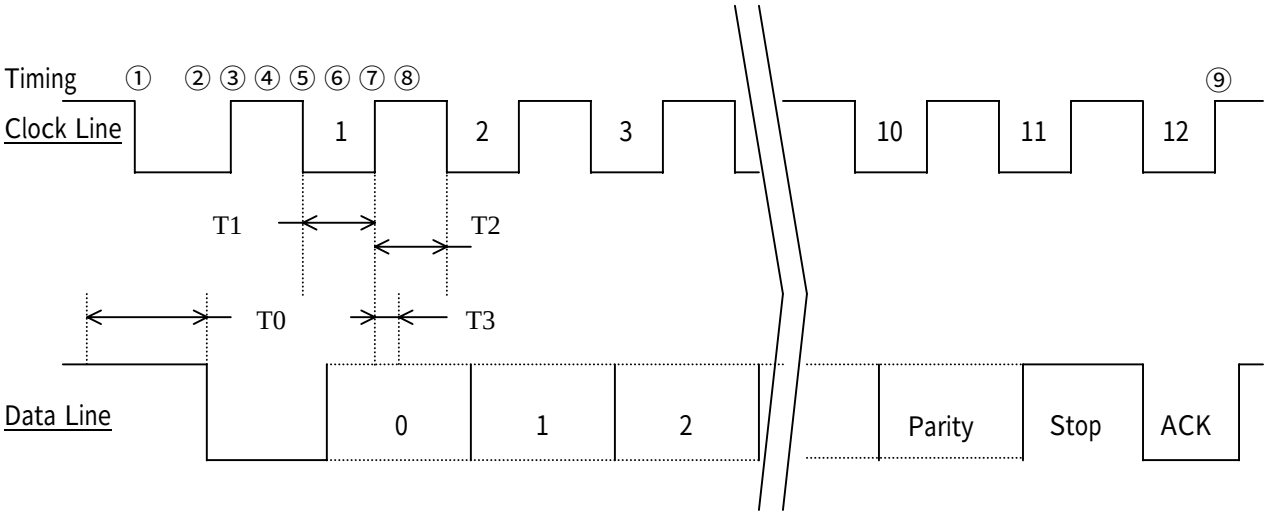

T0: About 60 us = Level holding time until start bit generation

T1: 30 to 50 us = Time to hold the clock Low

T2: 30 to 50 us = Time to hold the clock High

T3: 5 to 25 us = Data read time

① The host sets the Clock Line signal Low to issue a send-disable request to the device.

② The host sets the Data Line signal Low for the device to prepare for data reception. The bit becomes a start bit.

③ The host sets the Clock Line signal High for the device to start receiving data.

④ The device checks if the Data Line signal is Low (start bit).

⑤ The device sets the Clock Line signal Low to send a data bit generation request to the host.

⑥ The host operates the Data Line signal to generate data bits.

⑦ The device sets the Clock Line signal High for the host to maintain the data bits.

⑧ The device makes a check on the data bits.

⑨ The device generates the 12-th clock and ACK bit to indicate that it has received the data correctly.

7.5 Format

(1) One packet consists of three bytes.

Bit	First byte	Second byte	Third byte
7	Y Coordinate, bit 9	X Coordinate, bit 7	Y Coordinate, bit 7
6	Y Coordinate, bit 8	X Coordinate, bit 6	Y Coordinate, bit 6
5	X Coordinate, bit 9	X Coordinate, bit 5	Y Coordinate, bit 5
4	X Coordinate, bit 8	X Coordinate, bit 4	Y Coordinate, bit 4
3	Always 0	X Coordinate, bit 3	Y Coordinate, bit 3
2	Pen status	X Coordinate, bit 2	Y Coordinate, bit 2
1	Not defined (*1)	X Coordinate, bit 1	Y Coordinate, bit 1
0	Not defined (*2)	X Coordinate, bit 0	Y Coordinate, bit 0

The output coordinate is coded with 10 bits. The logical full-scale is used between the electrodes of the Touch-panel, and the physical full-scale is used for the effective input area of the Touch-panel that will be connected. Therefore, the maximum and minimum values are based on the scales.

(2) One packet consists of six bytes.

Bit	First byte	Second byte	Third byte	Fourth byte	Fifth byte	Sixth byte
7	Always 0	Y Coordinate, bit 5	X Coordinate, bit 5	Always 1	X Coordinate, bit 5	Y Coordinate, bit 5
6	Always 0	Y Coordinate, bit 4	X Coordinate, bit 4	Always 1	X Coordinate, bit 4	Y Coordinate, bit 4
5	Always 0	X Coordinate, bit 11	X Coordinate, bit 5	Always 0	Y Coordinate, bit 11	Y Coordinate, bit 5
4	Always 0	X Coordinate, bit 10	X Coordinate, bit 4	Always 0	Y Coordinate, bit 10	Y Coordinate, bit 4
3	Always 0	X Coordinate, bit 9	X Coordinate, bit 3	Always 0	Y Coordinate, bit 9	Y Coordinate, bit 3
2	Pen status	X Coordinate, bit 8	X Coordinate, bit 2	Pen status	Y Coordinate, bit 8	Y Coordinate, bit 2
1	Not defined (*1)	X Coordinate, bit 7	X Coordinate, bit 1	Not defined (*1)	Y Coordinate, bit 7	Y Coordinate, bit 1
0	Not defined (*2)	X Coordinate, bit 6	X Coordinate, bit 0	Not defined (*2)	Y Coordinate, bit 6	Y Coordinate, bit 0
0	SW status	X Coordinate, upper bit	X Coordinate, lower bit	Sysnc bite	Y Coordinate, upper bit	Y Coordinate, lower bit

The output coordinate is coded with 12 bits.There are a logical scale and a physical scale in the coordinates value. It is the same as three byte mode.

The upper two bits of the coordinates byte are shown are check bits of byte row. The check bit enables detection when the order of the byte received on the system shifts. The first subordinate position three bits in three bytes are reflecting the state of the maintained button by the controller now.

The bit of Not defined 1 and Not defined 2 reflect pressing the button excluding Touch-panel.

7.6 Relation between the Format and the Touch Panel Data

The control IC monitors the status of Touch-panel operation. When the Touch-panel is touched, bit 2 of byte 1 (pen status) in the packet is set to 1. Each coordinate is assigned to bits of the remaining bytes and output. While the Touch-panel is being touched continuously, only the coordinates in which a change is detected are output. When touching is released, the pen status is set to 0 and the coordinates that were touched last are output.

7.7 Device Operation at Power-on

The device performs a reset operation when power-on starts.

When the power is turned on, the supplied voltage reaches the standard MCU reset voltage and reset starts. About 800 ms later, the device transmits the two bytes 0xAA as the reset completion response and 0x00 as the device ID. The host receives 0xAA 0x00 and confirms that the device is connected.

The host transmits a command to set each operating mode.

Operating modes that can be set after reset are as follows:

Streaming mode, Disable, Reset echo mode, 400 cpi constant-speed (valid internally and independent of the Touch-panel operation because of mouse-compatible function), 25 ms transfer rate (valid internally and independent of the Touch-panel operation), Relative value mode (a command must be sent from a driver etc. and it must be made an absolute value)

8. Commands

The device responds to all standard commands. The control IC also uses nonstandard commands

8.1 List of Standard Commands

Command	Name	Device response
FF	Reset	Returns AA 00 after ACK.
FE	Resend	Resends the send data.
FD to F7	(Not defined)	Resends the data or returns an error.
F6	Set Defaults	Returns ACK only.
F5	Disable	Returns ACK only.
F4	Enable	Returns ACK only.
F3 nn	Set Transmission Rate	Returns ACK only.
F2	Request ID	Returns 00 after ACK.
F1	(Not defined)	Resends the data or returns an error.
F0	Set Polling Mode	Returns ACK only.
EF	(Not defined)	Resends the data or returns an error.
EE	Set Echo	Returns ACK only.
ED	(Not defined)	Resends the data or returns an error.
EC	Reset Echo	Returns ACK only.
EB	Read Data	Returns the relative coordinates after ACK.
EA	Set Stream Mode	Returns ACK only.
E9	Status Request	Returns the status information after ACK.
E8 mm	Set Resolution	Returns ACK only.
E7	Reset Constant Speed Mode	Returns ACK only.
E6	Set Constant Speed Mode	Returns ACK only.
E5 to 00	(Not defined)	Resends the data or returns an error.

nn: F3 command parameter in hexadecimal notation

There are seven registered values: 0A, 14, 28, 3C, 50, 64, and C8 in hexadecimal notation.

These same values in decimal notation are

10, 20, 40, 60, 80, 100, and 200, respectively. The unit is Hz.

mm: E8 command parameter

There are four registered values: 0, 1, 2, and 3.

0 represents 50 cpi, 1 represents 100 cpi, 2 represents 200 cpi, and 3 represents 400 cpi.

8.2 Details of Commands

(1) Device response

If a received command is correct, the device returns 0xFA as ACK.

If the received command is not correct, the device returns 0xFE as a resend request for the correct command.

If the command sent in response to the resend request is still invalid, the device returns 0xFC to indicate an error.

After returning the error notification, the device assumes there has been no command reception. If the device has received command F8 or E8 before the error command, it is also assumes that the F8 or E8 command parameter has not been received.

(2) Device status after command response

Command response prevents the device from sending data. Internally accumulated coordinate data is cleared.

(3) Reset 0xFF

When the host wants to return the device to the status immediately after power-on, it issues the Reset command.

The device returns ACK in response to the command.

After about 400 milliseconds, the device sends two bytes of data , 0xAA as a reset completion response and 0x00 as the device ID.

The host must wait until the data arrives.

(4) Resend 0xFE

If the host detects an error (e.g., parity error or incorrect response) in data received from the device or fails to receive data, it issues a Resend command asking the device to send the data again.

Upon receipt of the command, the device resends the previously sent data or packet.

(5) Set Defaults 0xF6

To place the device in the status immediately after power-on or after the execution of the Reset command, the host issues the Default command as soon as possible. The Default command eliminates waiting time.

In echo mode, the Default command is disabled. Thus, the host can only issue the command if it has confirmed that the echo mode is not active.

The device returns ACK in response to the command.

After that, the device enters the same status as after reset.

(6) Disable 0xF5

To stop the device from sending data, the host issues the Disable command.

The device returns ACK in response to the command, then enters disabled status.

(7) Enable 0xF4

To instruct the device to start sending data, the host issues the Enable command.

The device returns ACK in response to the command, then enters the enabled status.

If the Set Polling Mode command has been issued, the Enable command is unable to instruct the device to send data. To resolve this situation, cancel the Set Polling Mode command.

(8) Set Transmission Rate 0xF3 nn

To change the transmission rate at which the device sends data, the host issues the Set Transmission Rate command.

The host first sends 0xF3 to the device.

The device returns ACK in response to 0xF3, then waits for parameter nn. If the device is in enabled status, it sends the data even while waiting for parameter nn.

After confirming ACK from the device, the host sends parameter nn to the device.

The device returns ACK in response to the parameter, then sets the transmission rate as specified in the parameter. The device maintains the new transmission rate until receiving a Reset, Power-off, or Set Default command.

For this device, 12.5 milliseconds (80 Hz) is the fixed transmission rate.

(9) Request ID 0xF2

To confirm the device ID, the host issues a Request ID command .

The device returns ACK in response to 0xF2, then sends 0x00 as the device ID.

The device ID is commonly used as the ID of the PS/2 mouse. Regardless of the type of device, the device ID is fixed as 0x00 unless otherwise specified.

(10) Set Polling Mode 0xF0

The host issues the Set Polling Mode command under the following conditions:

The host does not want to receive data from the device in stream mode. Instead, it wants to receive the data when necessary while performing polling. Thus, the host needs to enable the polling mode until issuing the Set Stream Mode command 0xEA.

The device returns ACK in response to 0xF0, and no longer sends data in stream mode. It only sends data in response to the Request Data command, 0xEB.

(11) Set Echo 0xEE

The host issues the Set Echo command to instruct the device to always return the received data as is.

The device returns ACK in response to 0xEE. The echo mode is maintained until the Release Echo Mode (0xEC), Reset, or Power-off command is issued. While the echo mode is in effect, the device returns all received data to the host as is. In this case, the device does not send ACK.

(12) Reset Echo 0xEC

To switch the echo mode back to the previous mode, the host issues the Reset Echo command.

The device returns ACK in response to 0xEC, then switches the echo mode back to the previous mode.

(13) Read Data 0xEB

To receive data from the device in polling mode or disabled status, the host issues the Read Data command.

The device returns ACK in response to 0xEB, then sends 08 00 00.

This device processes absolute coordinates, and sends a fixed value of 08 00 00 in return for relative coordinates (values registered for PS2).

(14) Set Stream Mode 0xEA

To switch the polling mode to stream mode, the host issues the Set Stream Mode command.

The device returns ACK in response to 0xEA, then switches the polling mode to stream mode.

(15) Status Request 0xE9

To acquire setting status from the device, the host sends the Status Request command.

The device returns ACK in response to 0xE9, then sends three bytes of data in the following format:

Bit	First byte	Second byte	Third byte
7	Always 0	Resolution parameter	Transmission rate parameter
6	In Set Polling mode 1		
5	In Set Stream mode 1		
4	In Reset Constant Speed mode 1		
3	Always 0		
2	Always 0		
1	Always 0		
0	Always 0		

(16) Set Resolution 0xE8 mm

The host sends this command to change the relative coordinate resolution of the device.

The device receives this command and sends ACK. After sending ACK, it waits to receive the mm parameter. Although the device is in the reception wait state, it outputs data if it is in the enabled state.

The host confirms the ACK from the device and sends parameter mm to the device.

The device receives parameter mm and sends ACK, then sets the resolution indicated by parameter mm. This resolution is maintained until the device receives the reset, power-off, or Set Default command.

This device processes absolute coordinates, and cannot change resolution.

(17) Reset Constant Speed Mode 0xE7

The host sends the 0xE7 command to perform accelerated processing for calculating relative coordinate output for the device.

The device receives this command and sends the ACK response. The device only sends the ACK response and makes no changes. This command does change the device status.

(18) Set Constant Speed Mode 0xE6

The host sends the 0xE6 command when acceleration processing is not to be performed for calculating the relative coordinate output of the device.

The device receives this command and sends ACK. This command does change the device status.

8.3 List of Nonstandard Commands

Command	Name	Device response
E8 06	Stop Absolute Coordinate Output	Returns ACK only.
E8 07	Start Absolute Coordinate Output 3 byte mode	Returns ACK only.
E8 08	Start Absolute Coordinate Output 6 byte mode	Returns ACK only.

These commands use the Set Resolution command 0xE8 (standard command).

(1) Stop Absolute Coordinate Output 0xE8 06

This command uses parameter 0x06. Parameter 0x06 changes the device to the absolute coordinate output stop state, which is the same state that exists immediately after reset.

(2) Start Absolute Coordinate Output 3 byte mode 0xE8 07

This command uses parameter 0x07, which starts absolute coordinate output.

To start outputting the absolute coordinate after reset, the following commands must be sent to the device:

Start Absolute Coordinate Output: 0xE8 0x07

Enable: 0xF4

(3) Start Absolute Coordinate Output 6 byte mode 0xE8 08

This command uses parameter 0x08, which starts absolute coordinate output.

To start outputting the absolute coordinate after reset, the following commands must be sent to the device:

Start Absolute Coordinate Output: 0xE8 0x08

Enable: 0xF4

9. Reference Circuit Diagram

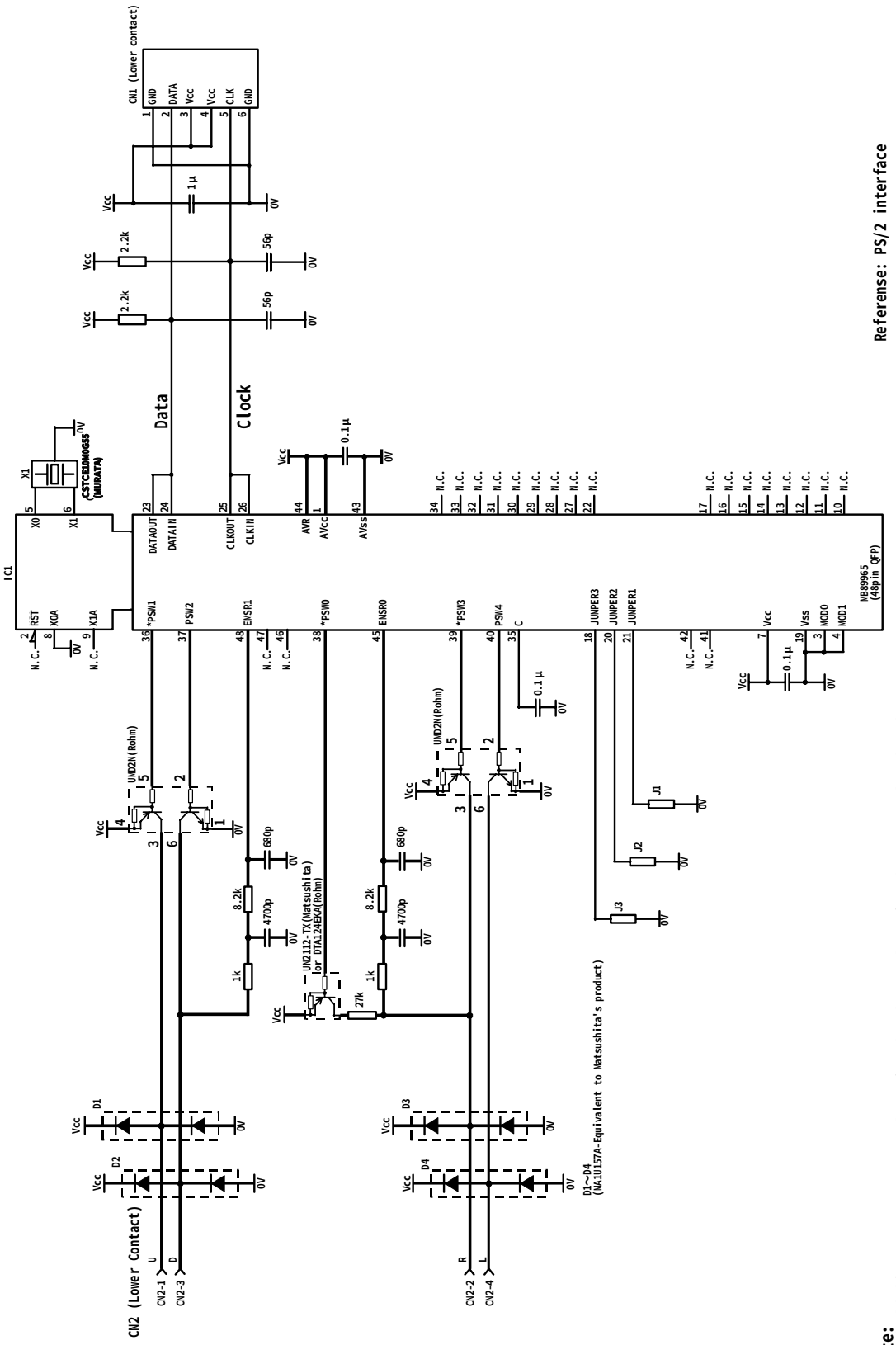

							TITLE	
							Control IC Product Specifications	
							DRAW. NO.	CUST
							Tech Bes F&T - I0565	
EDIT	DATE	DESIG.	CHECK	DESCRIPTION			Fujitsu Component Limited	SHEET 23 / 26
DESIG.			CHECK		APPR.			

10. Packing Specification

The controller must be packed in a tray exclusive for LSI in a corrugated carton.

11. Indication (Markings)

The following indication must be displayed on the products.

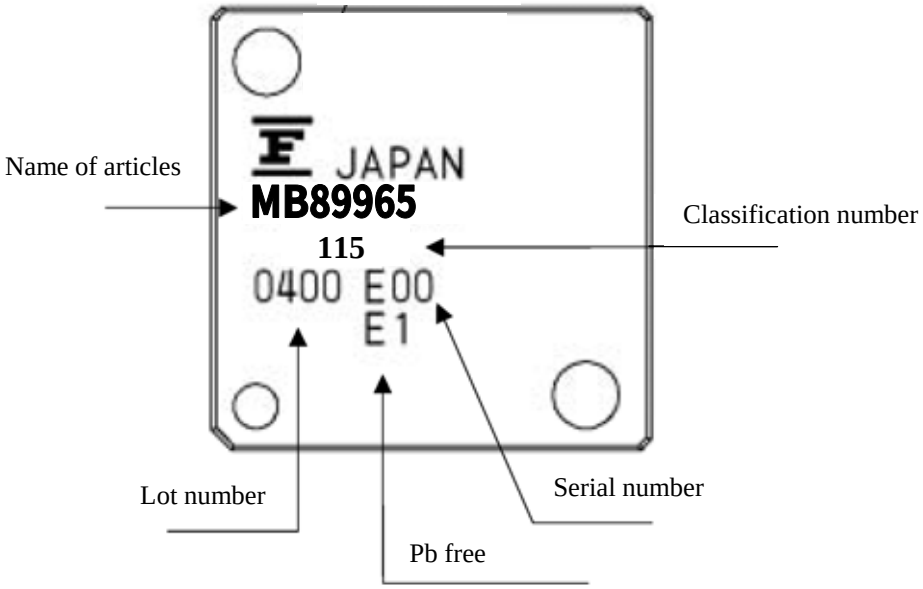

12. Notes

(1) Latch-up prevention

Since the controller is a CMOS IC, if excessive or insufficient voltage than allowed by Vcc is applied or a voltage exceeding the rating is applied between Vcc to Vss, a latch-up may occur.

If a latch-up occurs, the current overloads and circuits may be destroyed due to heat. Be careful not to exceed the maximum rating.

When turning on or off analog power supply, ensure that the analog power supply outputs (AVcc, AVR) and input do not exceed the digital power supply output (Vcc).

(2) Current or voltage fluctuation

The operating conditions of the Vcc power supply voltage are clearly specified. However, if the power supply voltage changes suddenly even within the rated specifications, the controller may malfunction. Therefore, stabilize the IC voltage supply as much as possible.

To stabilize the supplied voltage, it is recommended that the ripple (P-P value) be maintained within 10% of the standard Vcc value of the commercial frequency (50 to 60 Hz). It is also recommended that instantaneous voltage variations be restricted to 0.1 V/ms or less in instant fluctuation (e.g., due to power supply switching).

(3) Notes on using an external clock

Even when an external clock is used, to release the power-on reset and sleep modes, an external clock input is required because it takes time for the oscillation to stabilize.

(4) Procedure for power supply and analog input of A/D converter

The power supply (AVcc, AVR, AVss) and analog input (EMSR0,1) of the A/D converter must be applied when or after power (Vcc) has been turned on.

(5) Wiring of analog power supply

To reduce noise, the analog power supply of the controller must be supplied from a different system than the digital power supply. (See "Example of Circuit Configuration.")

(6) Wiring of analog signal

Analog signals (EMSR0,1) from the Touch-panel to controller and vibrator must be wired over the shortest route without crossing other signal lines.

(7) Storage and drying

The controller must be stored as shipped from us.

- It is recommended that the controller be kept at normal temperature (5 to 30°C) and humidity (40 to 70%).
- Do not store in a place exposed to corrosive gas or dust.
- To prevent condensation, do not store in a place subject to dramatic temperature fluctuations.
- When the controller has been stored for an excessive period of time, note that the soldering of lead terminals may deteriorate or become rusty or that the electrical characteristics may become substandard.

Since the controller is a QFP of plastic package, the package must be controlled so that moisture is not absorbed at re-flow soldering.

Therefore, note that the controller must be mounted within the periods shown below:

Whole dip soldering	Infrared light re-flow soldering	Infrared light re-flow soldering × 2	Vapor phase
Disable	Within two days	Disable	Within two days

(8) re-flow

The example of recommending the solder re-flow (infrared rays re-flow) is shown below.

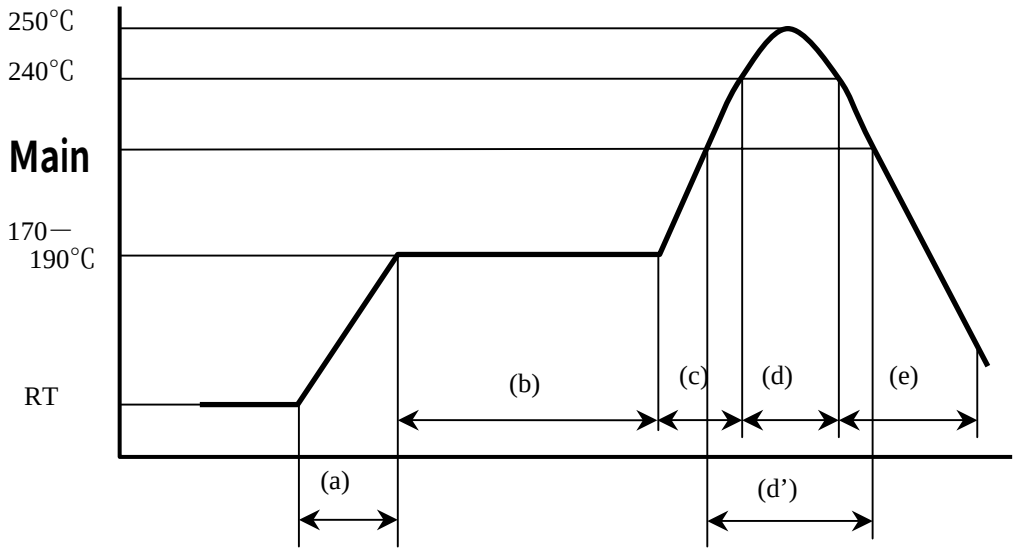

(a) Temperature increase gradient : Average : Average 1°C/s to 4°C/s
(b) Preliminary heating : 170°C to 190°C , 60s to 180s
(c) Temperature increase gradient : Average 1°C/s to 4°C/s
(d) Peak temperature : 250°CMax., 245°C or more, 10s or less
(d')Main heating : 230°C or more, 40s or less , or
225°C or more, 60s or less , or
220°C or more, 80s or less .
(e) Cooling : Air cooling or Forced cooling

Above temperature is measured on the surface side of IC

13. Others

If other problems which are not covered in this specifications occur, please consult with us so that we can determine proper corrective action.