STPS40SM100C

Power Schottky rectifier

Features

- High current capability
- Avalanche rated
- Low forward voltage drop current
- High frequency operation

Description

This Schottky rectifier is suited for high frequency switch mode power supply.

Packaged in TO-220AB, D^2PAK and I^2PAK, this device is intended to be used in notebook, game station and desktop adaptors, providing in these applications a good efficiency at both low and high load.

Table 1. Device summary

$I_{F(AV)}$	2 x 20 A
V_{RRM}	100 V
T_j (max)	150 °C
V_F(typ)	0.435 V

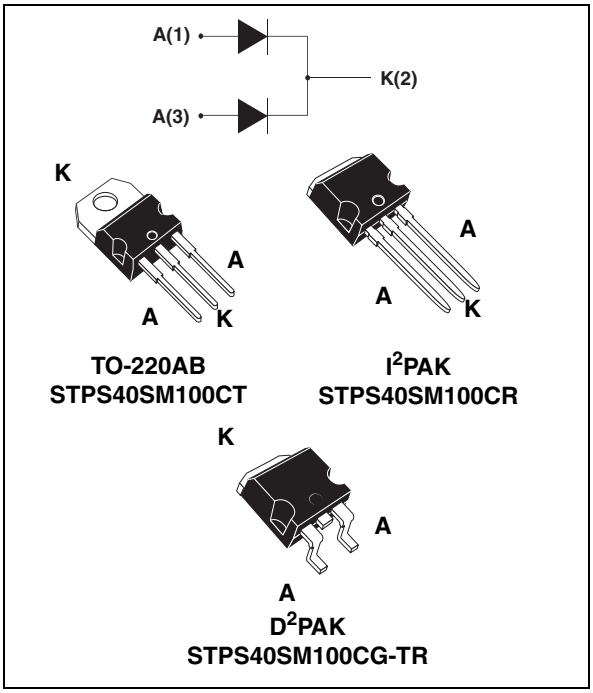

Figure 1. Electrical characteristics [a]

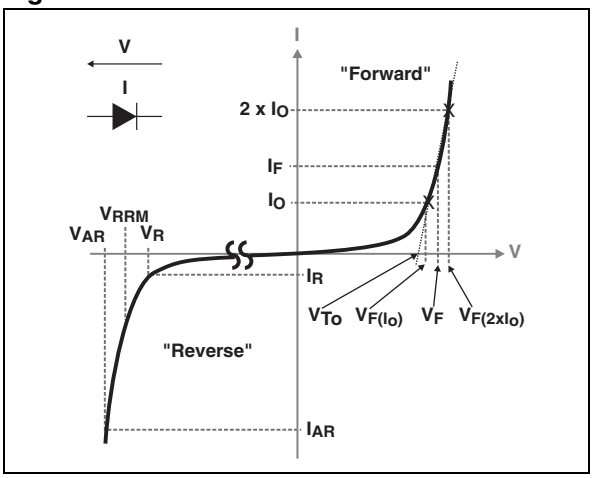

a. V_{ARM} and I_{ARM} must respect the reverse safe operating area defined in *Figure 11.* V_{AR} and I_{AR} are pulse measurements (t_p < 1 µs). V_R, I_R, V_{RRM} and V_F, are static characteristics

Downloaded from Arrow.com.

1 Characteristics

Table 2. Absolute ratings (limiting values)

Symbol	Parameter			Value	Unit
V_{RRM}	Repetitive peak reverse voltage			100	V
$I_{F(RMS)}$	Forward current rms			60	A
$I_{F(AV)}$	Average forward current $\delta = 0.5$	$T_c = 130$ °C	Per diode	20	A
		$T_c = 125$ °C	Per device	40	
I_{FSM}	Surge non repetitive forward current	$t_p = 10$ ms sinusoidal		530	A
P_{ARM}(1)	Repetitive peak avalanche power	$t_p = 1$ µs $T_j = 25$ °C		18000	W
V_{ARM} (2)	Maximum repetitive peak avalanche voltage	$t_p < 1$ µs $T_j < 150$ °C $I_{AR} < 45$ A		120	V
V_{ASM} (2)	Maximum single pulse peak avalanche voltage	$t_p < 1$ µs $T_j < 150$ °C $I_{AR} < 45$ A		120	V
T_{stg}	Storage temperature range			-65 to + 175	°C
T_j	Maximum operating junction temperature (3)			150	°C

1. For temperature or pulse time duration deratings, refer to *Figure 4.* and *Figure 5.* More details regarding the avalanche energy measurements and diode validation in the avalanche are provided in the application notes AN1768 and AN2025.
2. Refer to *Figure 11.*
3. $\frac{dPtot}{dTj} < \frac{1}{Rth(j-a)}$ condition to avoid thermal runaway for a diode on its own heatsink

Table 3. Thermal resistance

Symbol	Parameter		Value	Unit
$R_{th(j-c)}$	Junction to case	Per diode Total	1.3 0.7	°C/W
$R_{th(c)}$	Coupling		0.1	

Table 4. Static electrical characteristics (per diode, at 25 °C unless otherwise specified)

Symbol	Parameter	Test conditions		Min.	Typ.	Max.	Unit
I_R(1)	Reverse leakage current	$T_j = 25$ °C	$V_R = 70$ V		7		µA
		$T_j = 125$ °C			7		mA
		$T_j = 25$ °C	$V_R = 100$ V		13	45	µA
		$T_j = 125$ °C			13	45	mA
V_F(2)	Forward voltage drop	$T_j = 25$ °C	$I_F = 5$ A		520		mV
		$T_j = 125$ °C			435		
		$T_j = 25$ °C	$I_F = 10$A		620	700	
		$T_j = 125$ °C			520	580	
		$T_j = 25$ °C	$I_F = 20$ A		740	810	
		$T_j = 125$ °C			605	665	

1. Pulse test: $t_p = 5$ ms, $\delta < 2\%$
2. Pulse test: $t_p = 380$ µs, $\delta < 2\%$

To evaluate the conduction losses use the following equation:
$P = 0.580 \times I_{F(AV)} + 0.0043 \times I_F^2{}_{(RMS)}$

Downloaded from Arrow.com.

Figure 2. Average forward power dissipation versus average forward current (per diode)

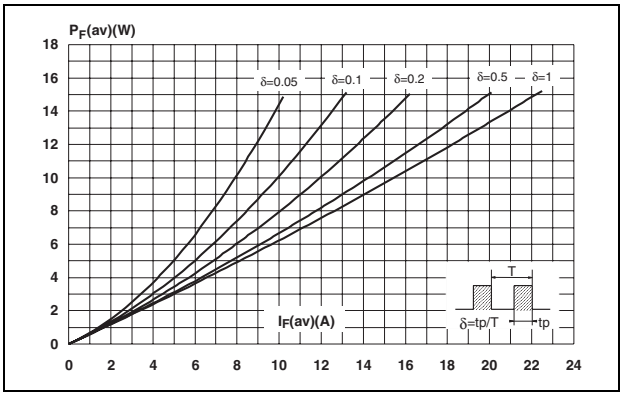

Figure 3. Average forward current versus ambient temperature (δ = 0.5, per diode)

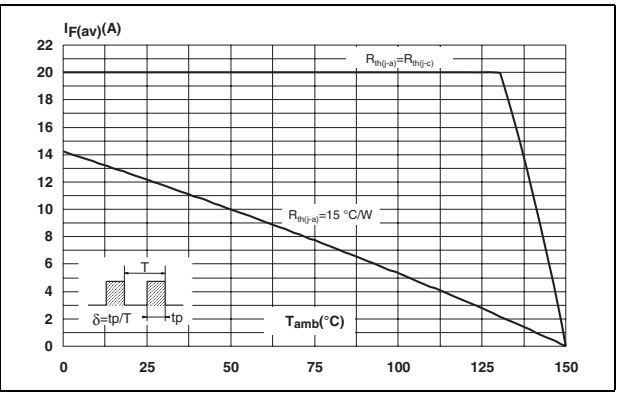

Figure 4. Normalized avalanche power derating versus pulse duration

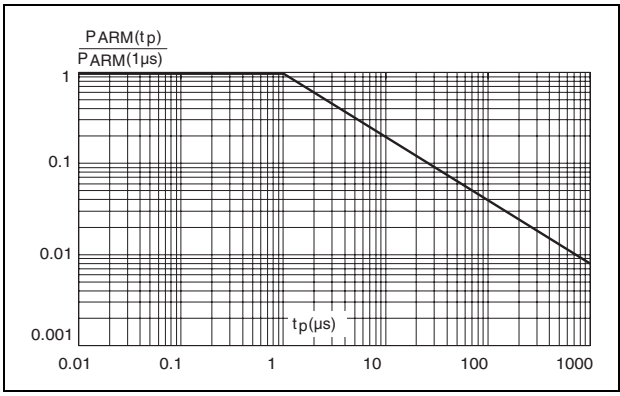

Figure 5. Normalized avalanche power derating versus junction temperature

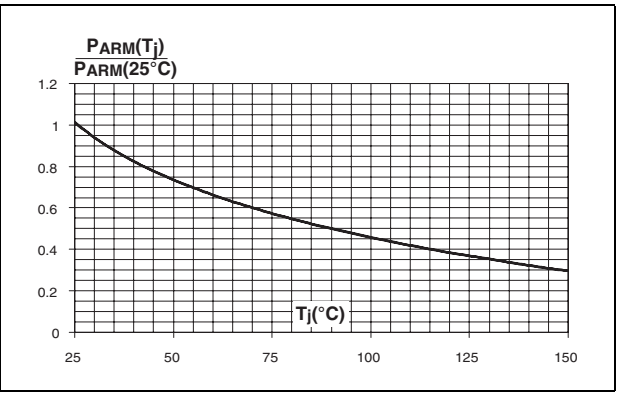

Figure 6. Non repetitive surge peak forward current versus overload duration, maximum values, per diode

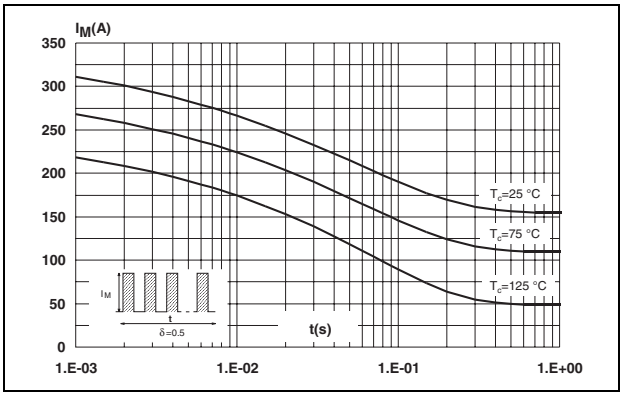

Figure 7. Relative variation of thermal impedance junction to case versus pulse duration

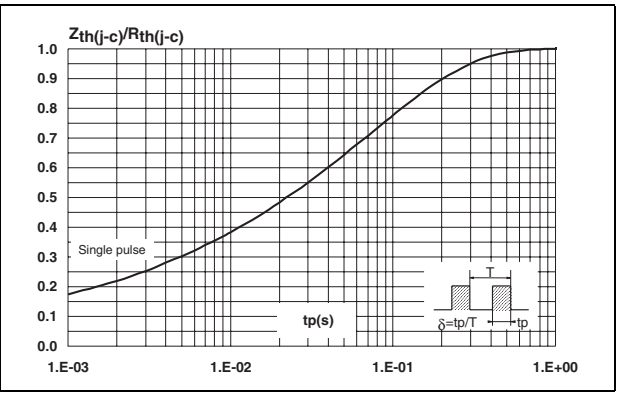

Downloaded from Arrow.com.

Figure 8. Reverse leakage current versus reverse voltage applied (typical values, per diode)

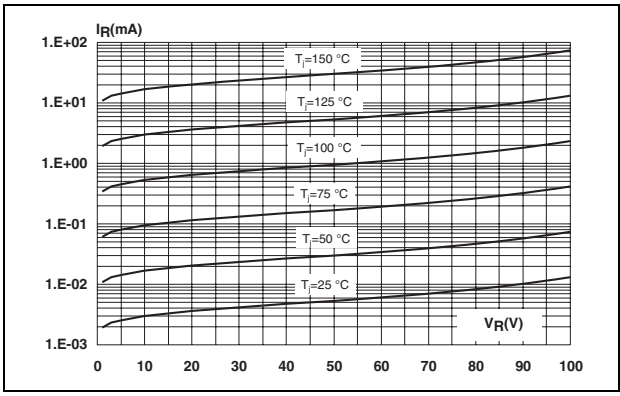

Figure 9. Junction capacitance versus reverse voltage applied (typical values, per diode)

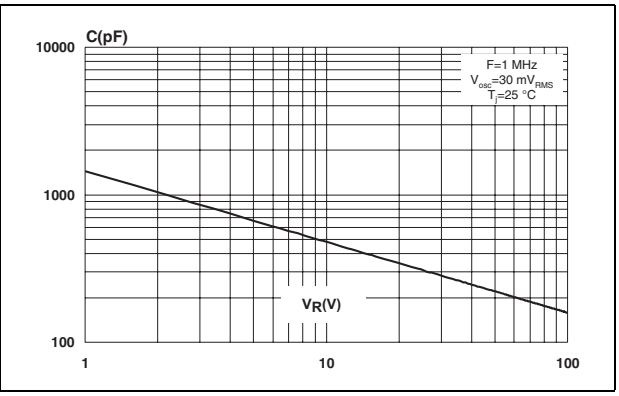

Figure 10. Forward voltage drop versus forward current (per diode)

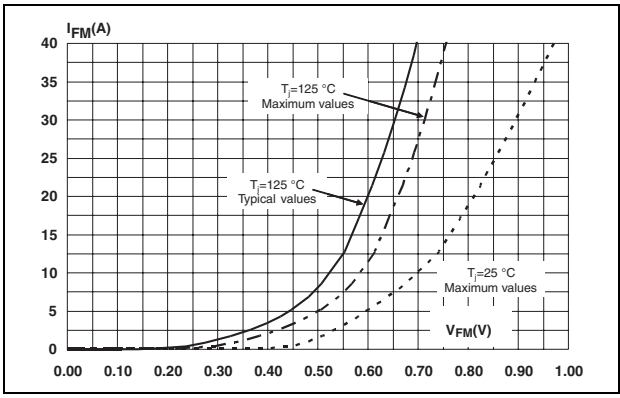

Figure 11. Reverse safe operating area (t_p < 1 µs and T_j < 150 °C)

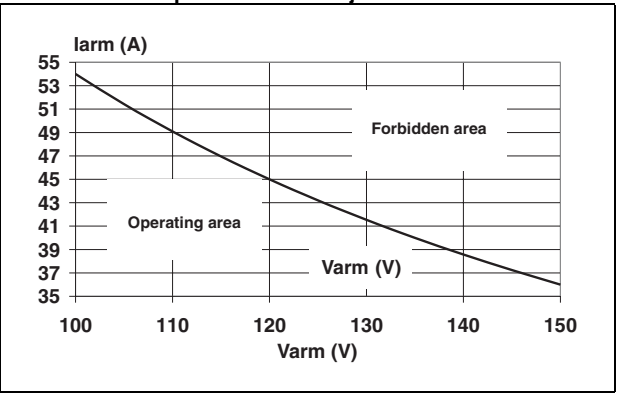

Downloaded from Arrow.com.

2 Package information

- Epoxy meets UL94, V0
- Cooling method: by conduction (C)
- Recommended torque value: 0.4 to 0.6 N·m

In order to meet environmental requirements, ST offers these devices in different grades of ECOPACK® packages, depending on their level of environmental compliance. ECOPACK® specifications, grade definitions and product status are available at: www.st.com. ECOPACK® is an ST trademark.

Table 5. TO-220AB dimensions

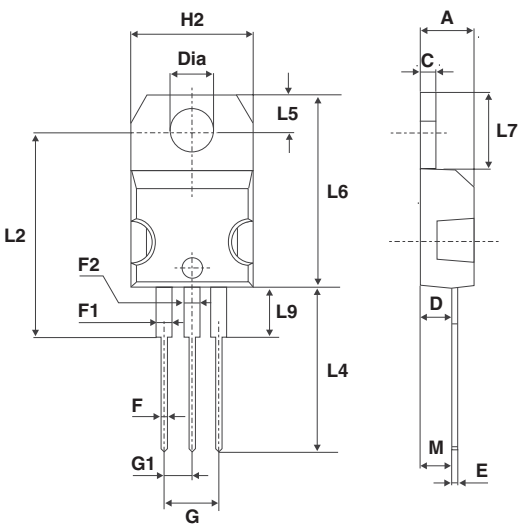

Ref.	Dimensions			
	Millimeters		Inches	
	Min.	Max.	Min.	Max.
A	4.40	4.60	0.173	0.181
C	1.23	1.32	0.048	0.051
D	2.40	2.72	0.094	0.107
E	0.49	0.70	0.019	0.027
F	0.61	0.88	0.024	0.034
F1	1.14	1.70	0.044	0.066
F2	1.14	1.70	0.044	0.066
G	4.95	5.15	0.194	0.202
G1	2.40	2.70	0.094	0.106
H2	10	10.40	0.393	0.409
L2	16.4 typ.		0.645 typ.	
L4	13	14	0.511	0.551
L5	2.65	2.95	0.104	0.116
L6	15.25	15.75	0.600	0.620
L7	6.20	6.60	0.244	0.259
L9	3.50	3.93	0.137	0.154
M	2.6 typ.		0.102 typ.	
Diam.	3.75	3.85	0.147	0.151

Downloaded from Arrow.com.

Mounting (soldering) the I^2PAK metal slug (heatsink) with alloy, like a surface mount device, IS NOT PERMITTED. A standard through-hole mounting is mandatory.

Table 6. I^2PAK dimensions

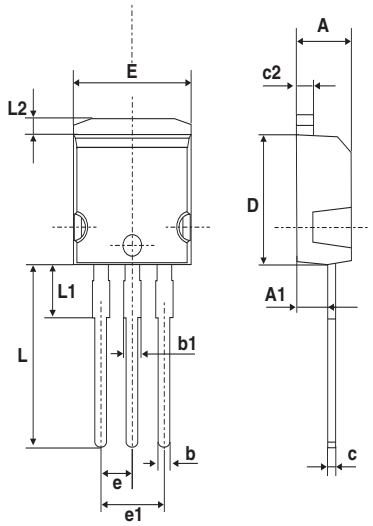

Ref.	Dimensions			
	Millimeters		Inches	
	Min.	Max.	Min.	Max.
A	4.40	4.60	0.173	0.181
A1	2.40	2.72	0.094	0.107
b	0.61	0.88	0.024	0.035
b1	1.14	1.70	0.044	0.067
c	0.49	0.70	0.019	0.028
c2	1.23	1.32	0.048	0.052
D	8.95	9.35	0.352	0.368
e	2.40	2.70	0.094	0.106
e1	4.95	5.15	0.195	0.203
E	10	10.40	0.394	0.409
L	13	14	0.512	0.551
L1	3.50	3.93	0.138	0.155
L2	1.27	1.40	0.050	0.055

Downloaded from Arrow.com.

Table 7. D²PAK dimensions

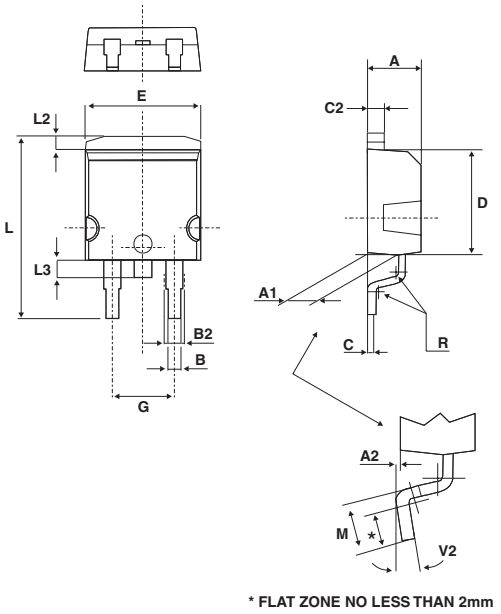

Ref.	Dimensions			
	Millimeters		Inches	
	Min.	Max.	Min.	Max.
A	4.40	4.60	0.173	0.181
A1	2.49	2.69	0.098	0.106
A2	0.03	0.23	0.001	0.009
B	0.70	0.93	0.027	0.037
B2	1.14	1.70	0.045	0.067
C	0.45	0.60	0.017	0.024
C2	1.23	1.36	0.048	0.054
D	8.95	9.35	0.352	0.368
E	10.00	10.40	0.393	0.409
G	4.88	5.28	0.192	0.208
L	15.00	15.85	0.590	0.624
L2	1.27	1.40	0.050	0.055
L3	1.40	1.75	0.055	0.069
M	2.40	3.20	0.094	0.126
R	0.40 typ.		0.016 typ.	
V2	0°	8°	0°	8°

Figure 12. D²PAK footprint (dimensions in mm)

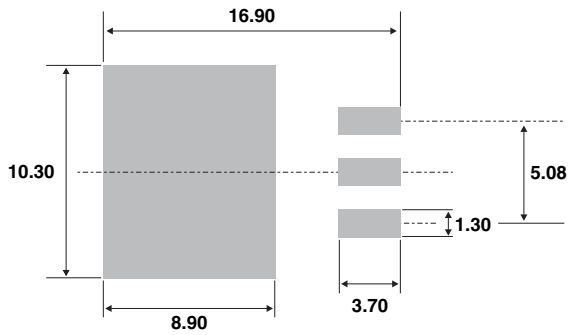

Downloaded from Arrow.com.

3 Ordering information

Table 8. Ordering information

Order code	Marking	Package	Weight	Base qty	Delivery mode
STPS40SM100CT	PS40SM100CT	TO-220AB	2.2 g	50	Tube
STPS40SM100CR	PS40SM100CR	I^2PAK	1.49 g	50	Tube
STPS40SM100CG	PS40SM100CG	D^2PAK	1.48 g	50	Tube
STPS40SM100CG-TR	PS40SM100CG	D^2PAK	1.48 g	1000	Tape and reel

4 Revision history

Table 9. Document revision history

Date	Revision	Changes
25-Mar-2009	1	First issue.
15-Apr-2010	2	Updated package graphics for TO-220AB on front page and in *Table 5*.

Downloaded from Arrow.com.

Please Read Carefully:

Information in this document is provided solely in connection with ST products. STMicroelectronics NV and its subsidiaries (“ST”) reserve the right to make changes, corrections, modifications or improvements, to this document, and the products and services described herein at any time, without notice.

All ST products are sold pursuant to ST’s terms and conditions of sale.

Purchasers are solely responsible for the choice, selection and use of the ST products and services described herein, and ST assumes no liability whatsoever relating to the choice, selection or use of the ST products and services described herein.

No license, express or implied, by estoppel or otherwise, to any intellectual property rights is granted under this document. If any part of this document refers to any third party products or services it shall not be deemed a license grant by ST for the use of such third party products or services, or any intellectual property contained therein or considered as a warranty covering the use in any manner whatsoever of such third party products or services or any intellectual property contained therein.

UNLESS OTHERWISE SET FORTH IN ST’S TERMS AND CONDITIONS OF SALE ST DISCLAIMS ANY EXPRESS OR IMPLIED WARRANTY WITH RESPECT TO THE USE AND/OR SALE OF ST PRODUCTS INCLUDING WITHOUT LIMITATION IMPLIED WARRANTIES OF MERCHANTABILITY, FITNESS FOR A PARTICULAR PURPOSE (AND THEIR EQUIVALENTS UNDER THE LAWS OF ANY JURISDICTION), OR INFRINGEMENT OF ANY PATENT, COPYRIGHT OR OTHER INTELLECTUAL PROPERTY RIGHT.

UNLESS EXPRESSLY APPROVED IN WRITING BY AN AUTHORIZED ST REPRESENTATIVE, ST PRODUCTS ARE NOT RECOMMENDED, AUTHORIZED OR WARRANTED FOR USE IN MILITARY, AIR CRAFT, SPACE, LIFE SAVING, OR LIFE SUSTAINING APPLICATIONS, NOR IN PRODUCTS OR SYSTEMS WHERE FAILURE OR MALFUNCTION MAY RESULT IN PERSONAL INJURY, DEATH, OR SEVERE PROPERTY OR ENVIRONMENTAL DAMAGE. ST PRODUCTS WHICH ARE NOT SPECIFIED AS "AUTOMOTIVE GRADE" MAY ONLY BE USED IN AUTOMOTIVE APPLICATIONS AT USER’S OWN RISK.

Resale of ST products with provisions different from the statements and/or technical features set forth in this document shall immediately void any warranty granted by ST for the ST product or service described herein and shall not create or extend in any manner whatsoever, any liability of ST.

ST and the ST logo are trademarks or registered trademarks of ST in various countries.

Information in this document supersedes and replaces all information previously supplied.

The ST logo is a registered trademark of STMicroelectronics. All other names are the property of their respective owners.

© 2010 STMicroelectronics - All rights reserved

STMicroelectronics group of companies

Australia - Belgium - Brazil - Canada - China - Czech Republic - Finland - France - Germany - Hong Kong - India - Israel - Italy - Japan - Malaysia - Malta - Morocco - Philippines - Singapore - Spain - Sweden - Switzerland - United Kingdom - United States of America

www.st.com

Downloaded from Arrow.com.