MULTIFUNCTION VOLTAGE REGULATOR FOR CAR RADIO

- 3 OUTPUTS:
  9.2V (500mA);
  5V (1A);
  5V (100mA)
  STANDBY
- OUT1 (9.2V) AND OUT2 (5V) WITH INDEPENDENT ENABLE CONTROL FOR STANDBY MODE
- 2A HIGH SIDE DRIVER WITH CLAMPED OUTPUT (16V)
  - LOGIC OUTPUT FOR:
  - SUPPLY UNDERVOLTAGE (LVW)
  - OVERVOLTAGE (FAULT)
  - THERMAL PROTECTION (FAULT)
- RESET FUNCTION
- IGNITION COMPARATOR
- REVERSE BATTERY AND LOAD DUMP PROTECTION
- THERMAL SHUTDOWN

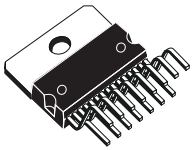

Multiwatt15
ORDERING NUMBER: L4953G

DESCRIPTION

The L4953G contains a triple voltage regulator and a power switch.

The IC includes a monitoring circuit to warn if a low voltage or no voltage condition is occuring. In stand-by output is active as long as possible even when in thermal shutdown or any other fault conditions.

The STCAP pin allows the use of a reserve supply capacitor that will hold enough energy for the 5V Stand-by line to allow the µP to store data.

BLOCK DIAGRAM

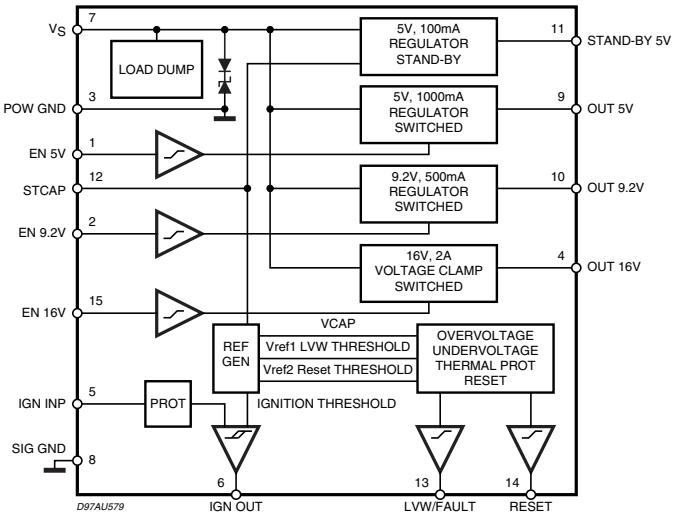

ABSOLUTE MAXIMUM RATINGS

Symbol	Parameter	Value	Unit
V_{SDC}	DC Operating Supply Voltage	–0.6 to 28	V
V_{STR}	Transient Supply Voltage	50	V
I_O	Output Current	internally limited	
T_{op}	Operating Temperature Range	–40 to 85	°C
T_{stg}	Storage Temperature	–55 to 150	°C

PIN CONNECTION (Top view)

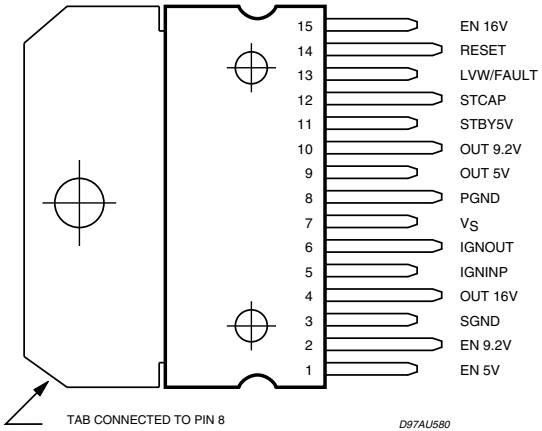

THERMAL DATA

Symbol	Parameter		Value	Unit
$R_{th\ j\text{-}case}$	Thermal Resistance Junction-case	Max.	2	°C/W

ELECTRICAL CHARACTERISTCS

(V_S = 14V, T_{amb} = 25°C, unless otherwise specified.)

Symbol	Parameter	Test Condition	Min.	Typ.	Max.	Unit
V_S	Operating Supply Voltage		11		18	V
En	Output Noise Voltage	Any reg. supply, f = 100Hz to 200KHz		200	400	µV
5V STAND-BY OUTPUT VOLTAGE						
$V_{5st\text{-}by}$	Stand-by Output Voltage		4.75	5	5.25	V
ΔV_{line}	Line Regulation	11V < V_S < 16V		5	50	mV
ΔV_{load}	Load Regulation	5mA < Iout < 100mA		12	100	mV
$V_{dropout}$	Dropout Voltage	I_{out} = 100mA, V_S = 5.5V		0.2	0.6	V
$I_{qst\text{-}by}$	Quiescent Current @ Stand-by	I_{Load} = 5mA		0.3	0.65	mA
5V/1000mA SWITCHED OUTPUT VOLTAGE						
V_{out5}	5V Output Voltage	no load	4.75	5	5.25	V
ΔV_{line}	Line Regulation	7V < V_S < 18V		5	50	mV
ΔV_{load}	Load Regulation	5mA < Iout < 1A		12	50	mV
$V_{dropout}$	Dropout Voltage	I_{out} = 1A, V_S = 5.5V		1	1.5	V
I_q	Quiescent Current	75mA < I_{out} < 1A		30	100	mA
I_{lim}	Current Limit	Output Shorted to GND	1	1.3		A
SWon	Switch ON		3.5			V
SW off	Switch OFF				1.5	V
SW hyst	Switch Hysteresis		100	200	350	mV
R_{in}	Input Impedance		10	40		KΩ
9.2V/500mA SWITCHED OUTPUT VOLTAGE						
$V_{out9.2}$	9.2V Output Voltage	no load		9.2±5%		V
ΔV_{line}	Line Regulation	11V < V_S < 18V		5	50	mV
ΔV_{load}	Load Regulation	5mA < I_{out} < 500mA		12	50	mV
$V_{dropout}$	Dropout Voltage	5.5V < V_{in} < 9.2V, I_{out} = 500mA		0.4	0.9	V
I_q	Quiescent Current	50mA < I_{out} < 500mA		10	25	mA
I_{lim}	Current Limit	Output Shorted to GND	500	600		mA
SVR	Supply Voltage Rejection	f = 3KHz	45	75		dB
SWon	Switch ON		3.5			V
SW off	Switch OFF				1.5	V
SW hyst	Switch Hysteresis		100	200	500	mV
Rin	Input Impedance		10	40		KΩ
HIGH SIDE DRIVER WITH CLAMPED OUTPUT (16V)						
V_{out16}	Max. Output Voltage	V_S = 18V	14.6		16.2	V
I_O	Output Continuous Current	V_S = 16V	2			A
$V_{dropout}$	Dropout Voltage	5V < V_{in} < 15V, I_{out} = 2A		0.5	1	V
SWon	Switch ON		3.5			V
SW off	Switch OFF				1.5	V
SW hyst	Switch Hysteresis		100	200	500	mV
R_{in}	Input Impedance		10	40		KΩ

ELECTRICAL CHARACTERISTCS (continued)
(V_S = 14V, T_{amb} = 25°C, unless otherwise specified.)

Symbol	Parameter	Test Condition	Min.	Typ.	Max.	Unit
FAULT						
TH_{fault}	Fault Threshold		7		8.5	V
$HYST_{fault}$	Fault Threshold Hysteresis		100	200	400	mV
OUT_{fault}	Fault Output Voltage				1.5	V
I_{leak}	Fault Leakage Current				50	µA
RESET						
$THON_{reset}$	Reset ON Threshold	MIN @ V_{MEM} = 4.75V MAX @ V_{MEM} = 5.25V	0.938		0.97	Vst-by
$THOFF_{reset}$	Reset OFF Threshold		0.97		0.99	Vst-by
$HYST_{reset}$	Reset Threshold Hysteresis		75	175	300	mV
OUT_{reset}	Reset Output Voltage	I_{LOAD} = 2mA			1.5	V
I_{leak}	Reset Leakage Current				50	µA
IGNITION						
TH_{ign}	Ign Comparator Positive Threshold		5.5	6	7.5	V
$HYST_{ign}$	Ign Comparator Threshold Hysteresis		100	300	500	mV
IGN_{high}	Ignition Comparator Output High		3.5		Vst-by	V
IGN_{low}	Ignition Comparator Output Low		-0.5		1.5	V

DIM.	mm			inch		
	MIN.	TYP.	MAX.	MIN.	TYP.	MAX.
A5						0.197
B			2.65			0.104
C			1.6			0.063
D		1			0.039	
E	0.49		0.55	0.019		0.022
F	0.66		0.75	0.026		0.030
G	1.02	1.27	1.52	0.040	0.050	0.060
G1	17.53	17.78	18.03	0.690	0.700	0.710
H1	19.6			0.772		
H2			20.2			0.795
L	21.9	22.2	22.5	0.862	0.874	0.886
L1	21.7	22.1	22.5	0.854	0.87	0.886
L2	17.65		18.1	0.695		0.713
L3	17.25	17.5	17.75	0.679	0.689	0.699
L4	10.3	10.7	10.9	0.406	0.421	0.429
L7	2.65		2.9	0.104		0.114
M	4.25	4.55	4.85	0.167	0.179	0.191
M1	4.73	5.08	5.43	0.186	0.200	0.214
S	1.9		2.6	0.075		0.102
S1	1.9		2.6	0.075		0.102
Dia1	3.65		3.85	0.144		0.152

OUTLINE AND MECHANICAL DATA

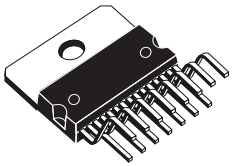

Multiwatt15 (Vertical)