FAIRCHILD™

Is Now Part of

ON Semiconductor®

To learn more about ON Semiconductor, please visit our website at www.onsemi.com

Please note: As part of the Fairchild Semiconductor integration, some of the Fairchild orderable part numbers will need to change in order to meet ON Semiconductor's system requirements. Since the ON Semiconductor product management systems do not have the ability to manage part nomenclature that utilizes an underscore (_), the underscore (_) in the Fairchild part numbers will be changed to a dash (-). This document may contain device numbers with an underscore (_). Please check the ON Semiconductor website to verify the updated device numbers. The most current and up-to-date ordering information can be found at www.onsemi.com. Please email any questions regarding the system integration to Fairchild_questions@onsemi.com.

ON Semiconductor and the ON Semiconductor logo are trademarks of Semiconductor Components Industries, LLC dba ON Semiconductor or its subsidiaries in the United States and/or other countries. ON Semiconductor owns the rights to a number of patents, trademarks, copyrights, trade secrets, and other intellectual property. A listing of ON Semiconductor's product/patent coverage may be accessed at www.onsemi.com/site/pdf/Patent-Marking.pdf. ON Semiconductor reserves the right to make changes without further notice to any products herein. ON Semiconductor makes no warranty, representation or guarantee regarding the suitability of its products for any particular purpose, nor does ON Semiconductor assume any liability arising out of the application or use of any product or circuit, and specifically disclaims any and all liability, including without limitation special, consequential or incidental damages. Buyer is responsible for its products and applications using ON Semiconductor products, including compliance with all laws, regulations and safety requirements or standards, regardless of any support or applications information provided by ON Semiconductor. "Typical" parameters which may be provided in ON Semiconductor data sheets and/or specifications can and do vary in different applications and actual performance may vary over time. All operating parameters, including "Typicals" must be validated for each customer application by customer's technical experts. ON Semiconductor does not convey any license under its patent rights nor the rights of others. ON Semiconductor products are not designed, intended, or authorized for use as a critical component in life support systems or any FDA Class 3 medical devices or medical devices with a same or similar classification in a foreign jurisdiction or any devices intended for implantation in the human body. Should Buyer purchase or use ON Semiconductor products for any such unintended or unauthorized application, Buyer shall indemnify and hold ON Semiconductor and its officers, employees, subsidiaries, affiliates, and distributors harmless against all claims, costs, damages, and expenses, and reasonable attorney fees arising out of, directly or indirectly, any claim of personal injury or death associated with such unintended or unauthorized use, even if such claim alleges that ON Semiconductor was negligent regarding the design or manufacture of the part. ON Semiconductor is an Equal Opportunity/Affirmative Action Employer. This literature is subject to all applicable copyright laws and is not for resale in any manner.

Downloaded from Arrow.com.

FAIRCHILD SEMICONDUCTOR™

April 1984
Revised February 2000

DM74ALS373
Octal D-Type 3-STATE Transparent Latch

General Description

These 8-bit registers feature totem-pole 3-STATE outputs designed specifically for driving highly-capacitive or relatively low-impedance loads. The high-impedance state and increased high-logic-level drive provide these registers with the capability of being connected directly to and driving the bus lines in a bus-organized system without need for interface or pull-up components. They are particularly attractive for implementing buffer registers, I/O ports, bidirectional bus drivers, and working registers.

The eight latches of the DM74ALS373 are transparent D-type latches. While the enable (G) is HIGH the Q outputs will follow the data (D) inputs. When the enable is taken LOW the output will be latched at the level of the data that was set up.

A buffered output control input can be used to place the eight outputs in either a normal logic state (HIGH or LOW logic levels) or a high-impedance state. In the high-impedance state the outputs neither load nor drive the bus lines significantly.

The output control does not affect the internal operation of the latches. That is, the old data can be retained or new data can be entered even while the outputs are OFF.

Features

- Switching specifications at 50 pF
- Switching specifications guaranteed over full temperature and V_{CC} range
- Advanced oxide-isolated, ion-implanted Schottky TTL process
- Functionally and pin for pin compatible with LS TTL counterpart
- Improved AC performance over DM74LS373 at approximately half the power
- 3-STATE buffer-type outputs drive bus lines directly

Ordering Code:

Order Number	Package Number	Package Description
DM74ALS373WM	M20B	20-Lead Small Outline Integrated Circuit (SOIC), JEDEC MS-013, 0.300 Wide
DM74ALS373SJ	M20D	20-Lead Small Outline Package (SOP), EIAJ TYPE II, 5.3mm Wide
DM74ALS373N	N20A	20-Lead Plastic Dual-In-Line Package (PDIP), JEDEC MS-001, 0.300 Wide

Devices also available in Tape and Reel. Specify by appending the suffix letter "X" to the ordering code.

Connection Diagram

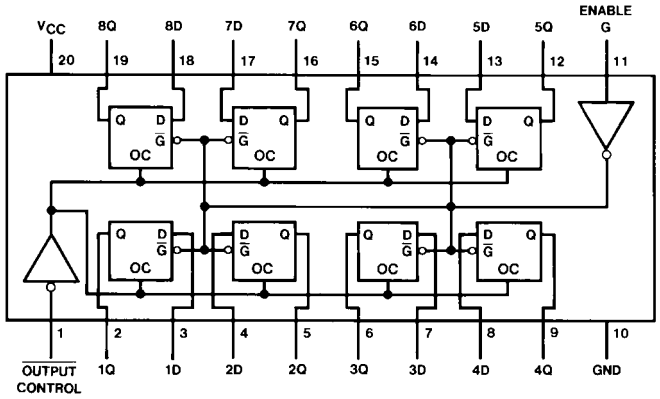

© 2000 Fairchild Semiconductor Corporation

Downloaded from Arrow.com.

Function Table

$\overline{\text{Output}}$ Control	Enable G	D	Output Q
L	H	H	H
L	H	L	L
L	L	X	Q_0
H	X	X	Z

L = LOW State
H = HIGH State
X = Don't Care
Z = High Impedance State
Q_0 = Previous Condition of Q

Logic Diagram

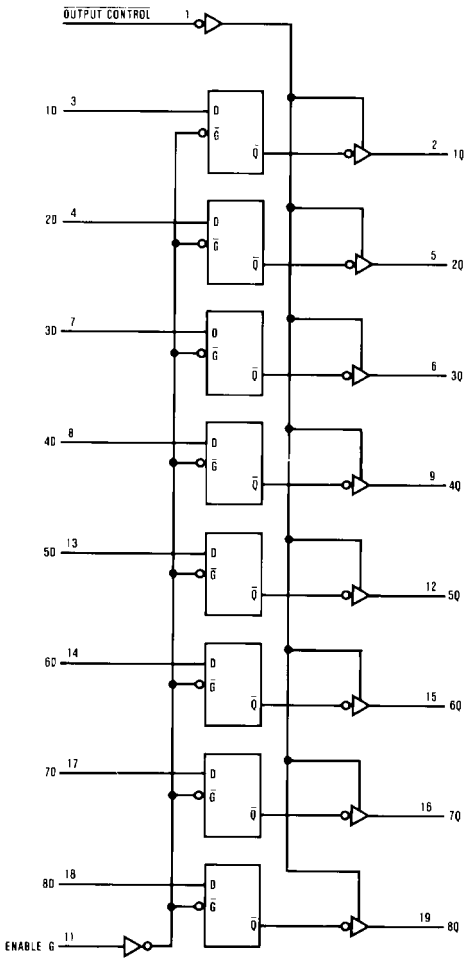

Downloaded from Arrow.com.

Absolute Maximum Ratings(Note 1)

Supply Voltage	7V
Input Voltage	7V
Voltage Applied to Disabled Output	5.5V
Operating Free Air Temperature Range	0°C to +70°C
Storage Temperature Range	−65°C to +150°C
Typical θ_{JA}	
N Package	57.0°C/W
M Package	76.0°C/W

Note 1: The "Absolute Maximum Ratings" are those values beyond which the safety of the device cannot be guaranteed. The device should not be operated at these limits. The parametric values defined in the Electrical Characteristics tables are not guaranteed at the absolute maximum ratings. The "Recommended Operating Conditions" table will define the conditions for actual device operation.

Recommended Operating Conditions

Symbol	Parameter	Min	Nom	Max	Units
V_{CC}	Supply Voltage	4.5	5	5.5	V
V_{IH}	HIGH Level Input Voltage	2			V
V_{IL}	LOW Level Input Voltage			0.8	V
I_{OH}	HIGH Level Output Current			−2.6	mA
I_{OL}	LOW Level Output Current			24	mA
t_W	Width of Enable Pulse, HIGH or LOW	10			ns
t_{SU}	Data Setup Time (Note 2)	10↓			ns
t_H	Data Hold Time (Note 2)	7↓			ns
T_A	Free Air Operating Temperature	0		70	°C

Note 2: The (↓) arrow indicates the negative edge of the enable is used for reference.

Electrical Characteristics

over recommended operating free air temperature range. All typical values are measured at V_{CC} = 5V, T_A = 25°C.

Symbol	Parameter	Conditions		Min	Typ	Max	Units
V_{IK}	Input Clamp Voltage	V_{CC} = 4.5V, I_I = −18 mA				−1.5	V
V_{OH}	HIGH Level Output Voltage	V_{CC} = 4.5V	I_{OH} = −2.6 mA	2.4	3.3		V
		V_{CC} = 4.5V to 5.5V, I_{OH} = −400 µA		V_{CC} − 2			V
V_{OL}	LOW Level Output Voltage	V_{CC} = 4.5V	I_{OL} = 24 mA		0.35	0.5	V
I_I	Input Current at Maximum Input Voltage	V_{CC} = 5.5V, V_{IH} = 7V				0.1	mA
I_{IH}	HIGH Level Input Current	V_{CC} = 5.5V, V_{IH} = 2.7V				20	µA
I_{IL}	LOW Level Input Current	V_{CC} = 5.5V, V_{IL} = 0.4V				−0.1	mA
I_O	Output Drive Current	V_{CC} = 5.5V	V_O = 2.25V	−30		−112	mA
I_{OZH}	OFF-State Output Current HIGH Level Voltage Applied	V_{CC} = 5.5V, V_O = 2.7V				20	µA
I_{OZL}	OFF-State Output Current LOW Level Voltage Applied	V_{CC} = 5.5V, V_O = 0.4V				−20	µA
I_{CC}	Supply Current	V_{CC} = 5.5V, Outputs OPEN	Outputs HIGH		9	16	mA
			Outputs LOW		16	25	mA
			Outputs Disabled		17	27	mA

Downloaded from Arrow.com.

Switching Characteristics

over recommended operating free air temperature range

Symbol	Parameter	Conditions	From	To	Min	Max	Units
t_{PLH}	Propagation Delay Time LOW-to-HIGH Level Output	V_{CC} = 4.5V to 5.5V R_L = 500Ω C_L = 50 pF	Data	Any Q	2	12	ns
t_{PHL}	Propagation Delay Time HIGH-to-LOW Level Output		Data	Any Q	4	16	ns
t_{PLH}	Propagation Delay Time LOW-to-HIGH Level Output		Enable	Any Q	6	22	ns
t_{PHL}	Propagation Delay Time HIGH-to-LOW Level Output		Enable	Any Q	7	23	ns
t_{PZH}	Output Enable Time to HIGH Level Output		Output Control	Any Q	6	18	ns
t_{PZL}	Output Enable Time to LOW Level Output		Output Control	Any Q	5	20	ns
t_{PHZ}	Output Disable Time from HIGH Level Output		Output Control	Any Q	2	10	ns
t_{PLZ}	Output Disable Time from LOW Level Output		Output Control	Any Q	2	12	ns

Downloaded from Arrow.com.

Physical Dimensions inches (millimeters) unless otherwise noted

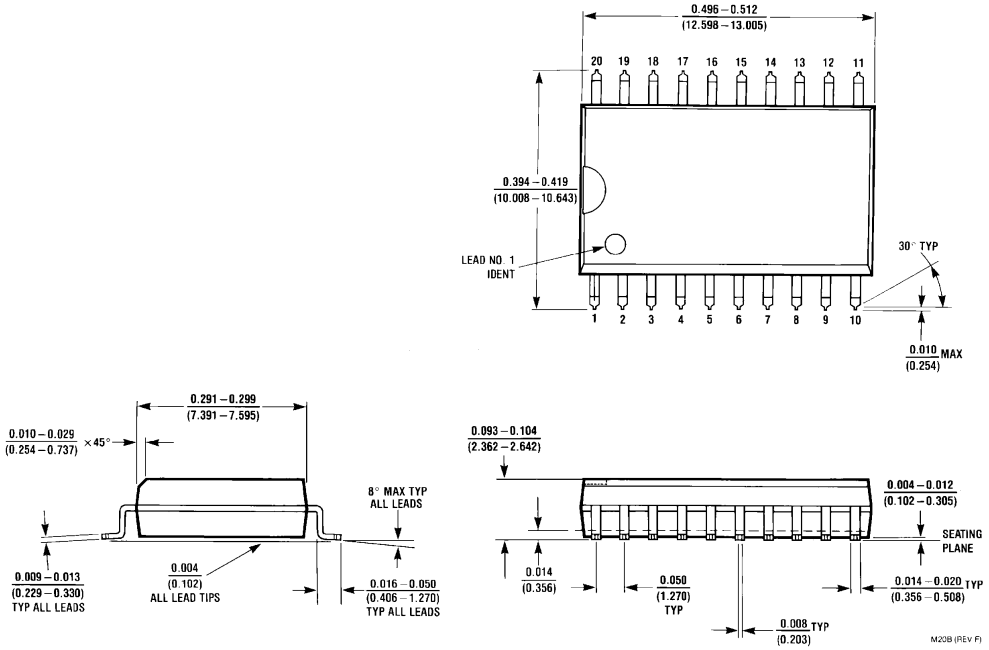

20-Lead Small Outline Integrated Circuit (SOIC), JEDEC MS-013, 0.300 Wide
Package Number M20B

Downloaded from Arrow.com.

Physical Dimensions inches (millimeters) unless otherwise noted (Continued)

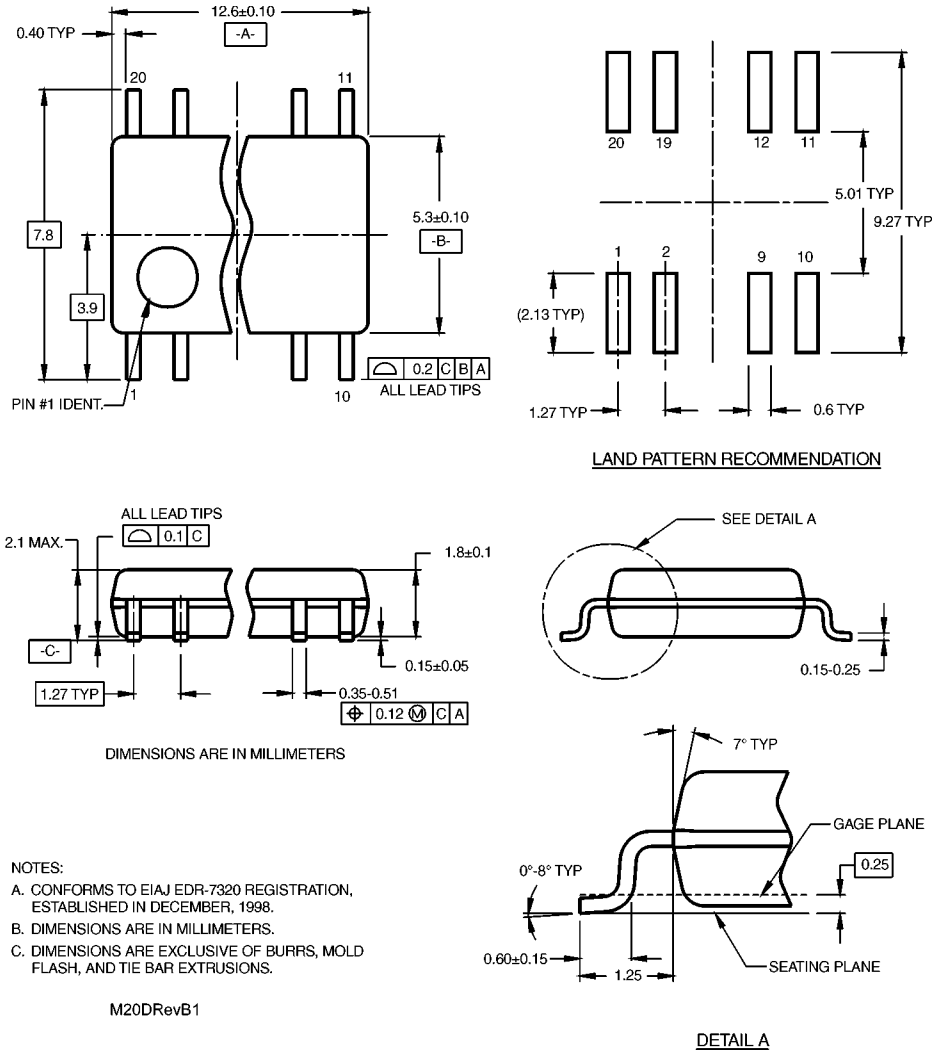

NOTES:

A. CONFORMS TO EIAJ EDR-7320 REGISTRATION, ESTABLISHED IN DECEMBER, 1998.

B. DIMENSIONS ARE IN MILLIMETERS.

C. DIMENSIONS ARE EXCLUSIVE OF BURRS, MOLD FLASH, AND TIE BAR EXTRUSIONS.

M20DRevB1

20-Lead Small Outline Package (SOP), EIAJ TYPE II, 5.3mm Wide
Package Number M20D

Downloaded from Arrow.com.

Physical Dimensions inches (millimeters) unless otherwise noted (Continued)

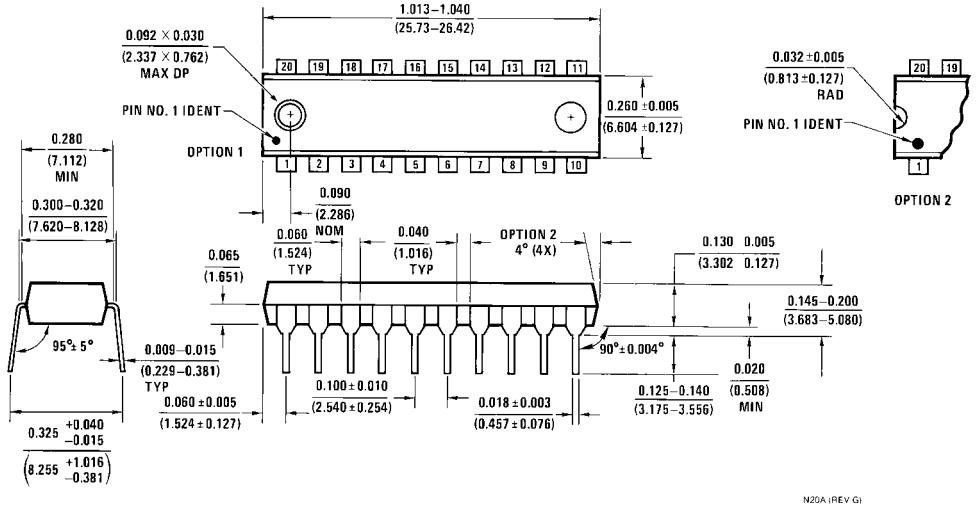

20-Lead Plastic Dual-In-Line Package (PDIP), JEDEC MS-001, 0.300 Wide
Package Number N20A

Fairchild does not assume any responsibility for use of any circuitry described, no circuit patent licenses are implied and Fairchild reserves the right at any time without notice to change said circuitry and specifications.

LIFE SUPPORT POLICY

FAIRCHILD'S PRODUCTS ARE NOT AUTHORIZED FOR USE AS CRITICAL COMPONENTS IN LIFE SUPPORT DEVICES OR SYSTEMS WITHOUT THE EXPRESS WRITTEN APPROVAL OF THE PRESIDENT OF FAIRCHILD SEMICONDUCTOR CORPORATION. As used herein:

1. Life support devices or systems are devices or systems which, (a) are intended for surgical implant into the body, or (b) support or sustain life, and (c) whose failure to perform when properly used in accordance with instructions for use provided in the labeling, can be reasonably expected to result in a significant injury to the user.
2. A critical component in any component of a life support device or system whose failure to perform can be reasonably expected to cause the failure of the life support device or system, or to affect its safety or effectiveness.

www.fairchildsemi.com

Downloaded from Arrow.com.

ON Semiconductor and ON are trademarks of Semiconductor Components Industries, LLC dba ON Semiconductor or its subsidiaries in the United States and/or other countries. ON Semiconductor owns the rights to a number of patents, trademarks, copyrights, trade secrets, and other intellectual property. A listing of ON Semiconductor's product/patent coverage may be accessed at www.onsemi.com/site/pdf/Patent−Marking.pdf. ON Semiconductor reserves the right to make changes without further notice to any products herein. ON Semiconductor makes no warranty, representation or guarantee regarding the suitability of its products for any particular purpose, nor does ON Semiconductor assume any liability arising out of the application or use of any product or circuit, and specifically disclaims any and all liability, including without limitation special, consequential or incidental damages. Buyer is responsible for its products and applications using ON Semiconductor products, including compliance with all laws, regulations and safety requirements or standards, regardless of any support or applications information provided by ON Semiconductor. "Typical" parameters which may be provided in ON Semiconductor data sheets and/or specifications can and do vary in different applications and actual performance may vary over time. All operating parameters, including "Typicals" must be validated for each customer application by customer's technical experts. ON Semiconductor does not convey any license under its patent rights nor the rights of others. ON Semiconductor products are not designed, intended, or authorized for use as a critical component in life support systems or any FDA Class 3 medical devices or medical devices with a same or similar classification in a foreign jurisdiction or any devices intended for implantation in the human body. Should Buyer purchase or use ON Semiconductor products for any such unintended or unauthorized application, Buyer shall indemnify and hold ON Semiconductor and its officers, employees, subsidiaries, affiliates, and distributors harmless against all claims, costs, damages, and expenses, and reasonable attorney fees arising out of, directly or indirectly, any claim of personal injury or death associated with such unintended or unauthorized use, even if such claim alleges that ON Semiconductor was negligent regarding the design or manufacture of the part. ON Semiconductor is an Equal Opportunity/Affirmative Action Employer. This literature is subject to all applicable copyright laws and is not for resale in any manner.

PUBLICATION ORDERING INFORMATION

LITERATURE FULFILLMENT:
Literature Distribution Center for ON Semiconductor
19521 E. 32nd Pkwy, Aurora, Colorado 80011 USA
Phone: 303−675−2175 or 800−344−3860 Toll Free USA/Canada
Fax: 303−675−2176 or 800−344−3867 Toll Free USA/Canada
Email: orderlit@onsemi.com

N. American Technical Support: 800−282−9855 Toll Free USA/Canada
Europe, Middle East and Africa Technical Support:
Phone: 421 33 790 2910
Japan Customer Focus Center
Phone: 81−3−5817−1050

ON Semiconductor Website: **www.onsemi.com**

Order Literature: http://www.onsemi.com/orderlit

For additional information, please contact your local Sales Representative

Downloaded from Arrow.com.