ADL6012-EVALZ User Guide

UG-1675

One Technology Way • P.O. Box 9106 • Norwood, MA 02062-9106, U.S.A. • Tel: 781.329.4700 • Fax: 781.461.3113 • www.analog.com

Evaluating the ADL6012 2 GHz to 67 GHz, 500 MHz Bandwidth, Envelope Detector

FEATURES

Fully featured evaluation board for the ADL6012
Specified up to 67 GHz
3.15 V to 5.25 V operation

EVALUATION KIT CONTENTS

ADL6012-EVALZ evaluation board

EQUIPMENT NEEDED

Analog signal generator up to 67 GHz (E8257D)
High speed oscilloscope (MSOS254A)
DC voltmeter (34401A)
5 V power supply (E3631A)
Differential probe (1131A)

GENERAL DESCRIPTION

The ADL6012-EVALZ provides efficient evaluation of the ADL6012 2 GHz to 67 GHz envelope detector. The ADL6012 has fast rise time and fall time responses, around 1 ns depending on input power levels, with an output envelope bandwidth of 500 MHz. The ADL6012-EVALZ provides the basic connections for the RF input signal and the envelope output voltage. Differential envelope outputs on the ADL6012-EVALZ can be directly connected to a high speed oscilloscope to evaluate the differential envelope tracking capabilities.

For full details on the ADL6012, see the ADL6012 data sheet. Consult the ADL6012 data sheet in conjunction with this user guide when using the ADL6012-EVALZ evaluation board.

EVALUATION BOARD PHOTOGRAPH

Figure 1.

TABLE OF CONTENTS

REVISION HISTORY

6/2020—Revision 0: Initial Version

EVALUATION BOARD SETUP EQUIPMENT

POWER SUPPLY

The ADL6012-EVALZ requires a single 5 V power supply. An external Agilent E3631A power supply is acceptable to use to power the ADL6012-EVALZ with current consumption around 33 mA. The ADL6012 can be disabled with the DIS jumper. Short the jumper to disable the ADL6012.

RF INPUT

The Agilent E8257D analog signal generator is acceptable to use to generate a continuous wave (CW) signal up to 67 GHz and provide the CW signal source to the ADL6012-EVALZ. The RFIN connector on the ADL6012-EVALZ is 1.85 mm, rated up to 67 GHz, and can be directly connected to the Agilent E8257D signal generator.

HIGH SPEED OSCILLOSCOPE

The Keysight MSOS254A high speed oscilloscope is acceptable to use to accurately measure the rise and fall times of the ADL6012. The Keysight MSOS254A oscilloscope must have a bandwidth of 2 GHz or higher to accurately measure the ADL6012 output response. The amplitude modulation (AM) signal and the pulse modulated RF signal can be measured with a differential probe at the envelope outputs with the high speed oscilloscope (see Figure 3). The Agilent 1331A differential probe is acceptable to use. If a differential probe is not available, connect the VEH− and VEH+ Subminiature Version A (SMA) connectors to the Keysight MSOS254A oscilloscope with 50 Ω, impedance controlled RF cables terminated with 50 Ω at the oscilloscope inputs (see Figure 4). Ensure that both RF cables are less than 2 inches in length to minimize reflections.

DC VOLTMETER

The Agilent 34401A dc voltmeter is acceptable to use to measure the constant envelope voltage across the VEH+ and VEH− test points. This voltage is the differential output voltage measured when the RF input is a CW with a constant envelope.

EVALUATION BOARD SETUP PROCEDURE

The ADL6012-EVALZ provides the basic connections to evaluate the functionality of the ADL6012 envelope detector (see Figure 2).

To set up the ADL6012-EVALZ to evaluate the ADL6012, take the following steps:

1. Connect the E3631A negative terminal ground turret to the GND1 turret on the ADL6012-EVALZ.
2. Connect the E3631A positive 5V terminal to the ADL6012-EVALZ VPOS turret.
3. Set the E3631A power supply to 5 V and set the current limit to 100 mA.
4. Turn on the E3631A 5 V power supply.
5. Connect the E8257D 67 GHz signal generator to the 1.8 mm edge RFIN connector on the ADL6012-EVALZ. Set the Agilent E8257D frequency between 2 GHz and 67 GHz and adjust the signal level according to the detection range of the ADL6012.
6. Measure the differential envelope output voltage across the VEH+ and VEH− turrets on the ADL6012-EVALZ using either the two output turrets or the SMA connectors, depending on the type of measurement.

DC-COUPLED CONSTANT ENVELOPE OUTPUT MEASUREMENTS

Figure 2 shows the connections required to measure the differential, constant envelope outputs (the dc voltage) across the VEH+ and VEH−turrets. The Agilent 34401A voltmeter is used to take the dc output measurements as the RF input power varies across the ADL6012 detection range.

HIGH SPEED PULSED OUTPUT MEASUREMENTS

For high speed pulse response measurements, use the Agilent 1131A differential probe to measure the envelope output response. See Figure 3 for the measurement points used to make the connections to the ADL6012-EVALZ. The ADL6012 is designed to drive a 100 Ω differential load. Place a 100 Ω resistor (R4) on the ADL6012-EVALZ to evaluate the ADL6012 output response to the differential load. Each envelope output has a common-mode voltage of 2.5 V with the VPOS voltage at 5 V.

AM OUTPUT RESPONSE MEASUREMENTS

For AM output response measurements, the envelope outputs can be connected to the Keysight MSOS254A oscilloscope with a 50 Ω termination on each envelope output (see Figure 4). Each envelope output on VEH+ and VEH− is ac-coupled on the ADL6012-EVALZ. Use 50 Ω cables to connect the ADL6012-EVALZ to the Keysight MSOS254A oscilloscope. Keep the output cables as short as possible and at equal lengths to minimize reflections from the load. Both the positive peaks and negative peaks of the envelope are measured on each oscilloscope channel.

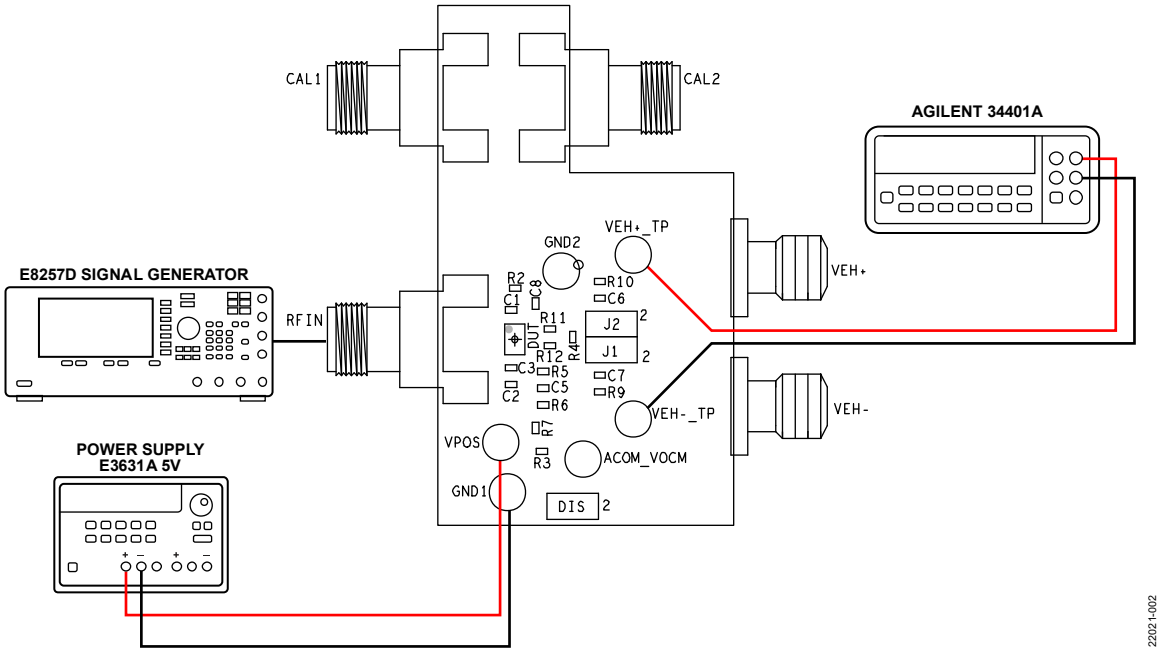

Figure 2. Typical ADL6012 DC Measurement Setup

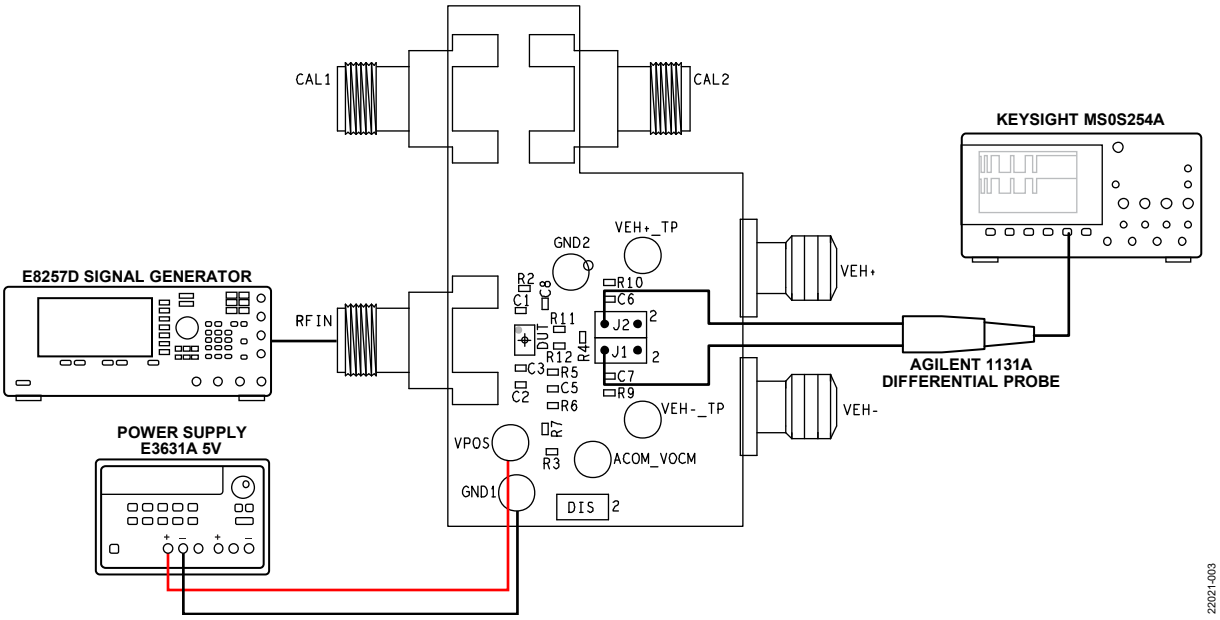

Figure 3. ADL6012 Envelope Measurement Using Differential Probe

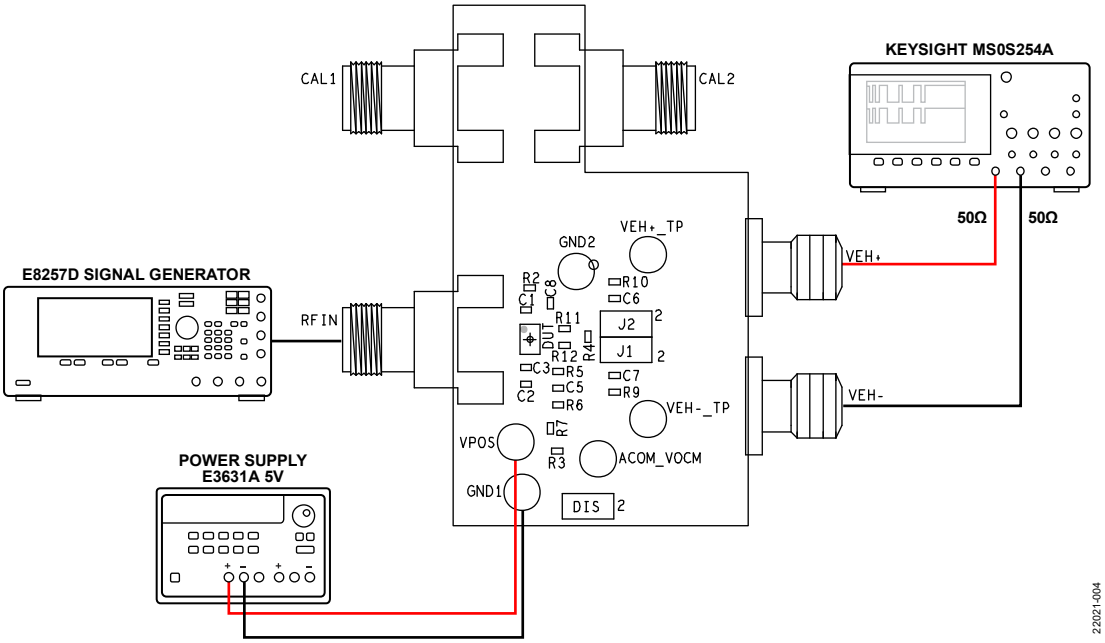

Figure 4. Differential Envelope Output Measurement for AM or Pulsed RF Response

EVALUATION BOARD SCHEMATIC AND ARTWORK

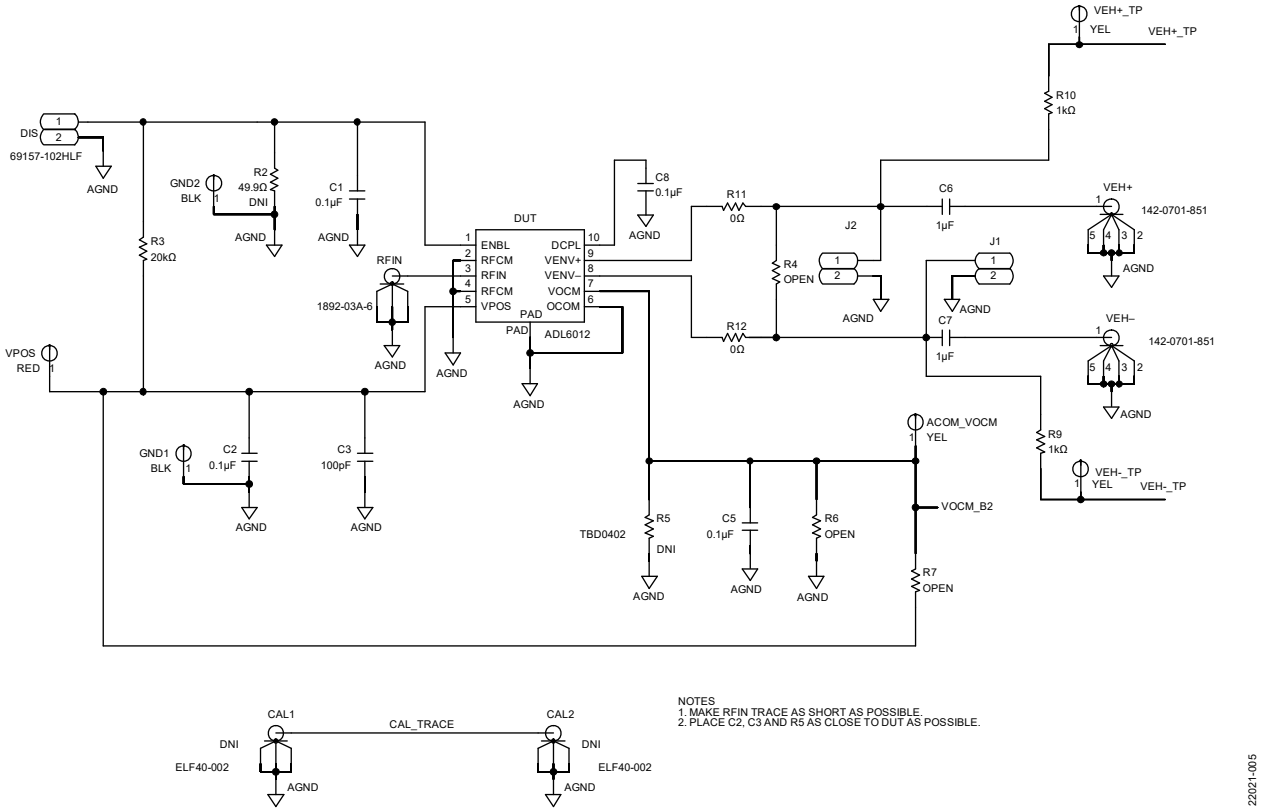

Figure 5. ADL6012-EVALZ Schematic

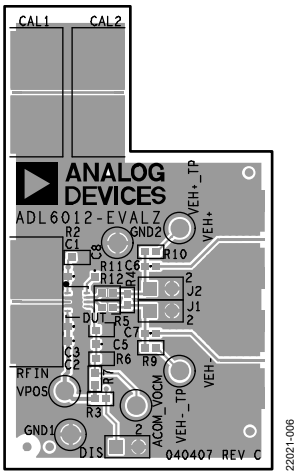

Figure 6. ADL6012-EVALZ, Top Layer

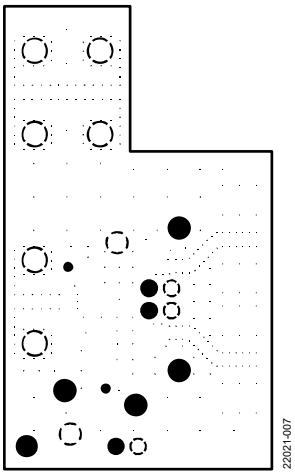

Figure 7. ADL6012-EVALZ, Layer 2

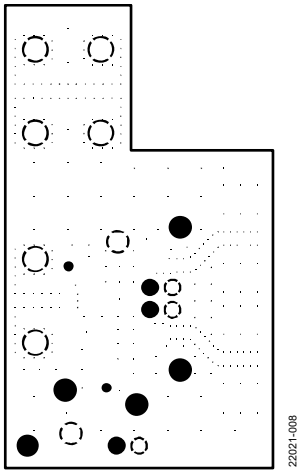

Figure 8. ADL6012-EVALZ, Layer 3

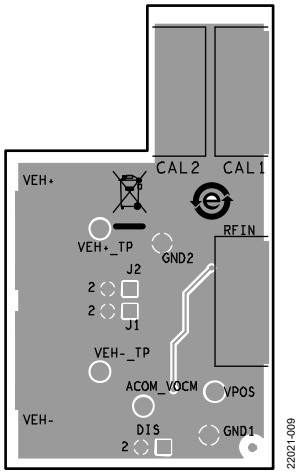

Figure 9. ADL6012-EVALZ, Bottom Layer

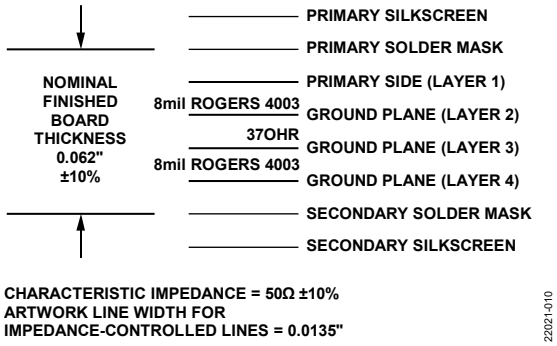

Figure 10. ADL6012-EVALZ Stack Up

ORDERING INFORMATION

BILL OF MATERIALS

Table 1.

Qty	Designator	Description	Manufacturer	Part Number
1	C1	Bypass capacitor to enable 0.1 µF	PPI	0402BB104KW500
1	C2	Supply bypass capacitor, use microwave grade, place as close to the VPOS pin as possible, 0.1 µF	PPI	0402BB104KW500
1	C3	Supply bypass capacitor, use microwave grade, place as close to the VPOS pin as possible, 100 pF	Murata	GCM1555C1H101JA16D
2	C5, C8	Bypass capacitor for common-mode voltage, place as close to the VOCM pin as possible, 0.1 µF	PPI	0402BB104KW500
2	C6, C7	AC coupling capacitors for envelope outputs, 1 µF	Yageo	CC0402MRX5R6BB105
2	CAL1, CAL2	Connectors, placement for calibration trace, not installed		
1	CAL_TRACE	RF trace for input level calibration		
1	R2	Enable termination resistor, open, 49.9 Ω	Panasonic	ERJ2RKF49R9X
1	R3	Enable pull-up resistor to VPOS pin, 20 kΩ	Panasonic	ERJ2RKF2002X
1	R4	Differential output load resistor, open, not installed		
3	R5 to R7	Resistor divider network for output common-mode voltage, open, not installed		
2	R9, R10	Series envelope output resistors, 1 kΩ	Panasonic	ERJ2RKF1001X
2	R11, R12	0 Ω resistors	Panasonic	ERJ2GE0R00X
1	RFIN	1.85 mm edge mount connector, Southwest	Southwest	1892-03A-6
2	VEH+, VEH−	Envelope output SMA connectors, end launch, 50 Ω	Cinch	142-0701-851
1	DIS	Disable jumper, short to ground to disable the device	Wurth	61300211121
1	ACOM_VOCM	Analog input to control the common-mode voltage output, yellow	Components Corporation	TP-104-01-04
1	VEH+_TP	Test point connected to VENV+, yellow	Components Corporation	TP-104-01-04
1	VEH−_TP	Test point connected to VENV−, yellow	Components Corporation	TP-104-01-04
2	GND1, GND2	Turrets connected to PCB ground, black	Mill-Max	2308-2-00-80-00-00-07-0
1	VPOS	Power supply turret connected to VPOS pin, red	Components Corporation	TP-104-01-04
1	DUT	ADL6012 IC	Analog Devices, Inc.	ADL6012ACPZN-R7
2	J1, J2	Jumper headers, can be used to connect to active probe	Wurth	61300211121

NOTES

ESD Caution

ESD (electrostatic discharge) sensitive device. Charged devices and circuit boards can discharge without detection. Although this product features patented or proprietary protection circuitry, damage may occur on devices subjected to high energy ESD. Therefore, proper ESD precautions should be taken to avoid performance degradation or loss of functionality.

UG22021-6/20(0)

ANALOG DEVICES

www.analog.com