2.7 V to 5.5 V, Serial-Input, Voltage Output, Unbuffered 16-Bit DAC

Data Sheet **AD5541A**

FEATURES

16-bit resolution
11.8 nV/√Hz noise spectral density
1 µs settling time
1.1 nV-sec glitch energy
0.05 ppm/°C temperature drift
5 kV HBM ESD classification
0.375 mW power consumption at 3 V
2.7 V to 5.5 V single-supply operation
Hardware $\overline{CS}$ and $\overline{LDAC}$ functions
50 MHz SPI-/QSPI-/MICROWIRE-/DSP-compatible interface
Power-on reset clears DAC output to zero scale
Available in 3 mm × 3 mm, 8-/10-lead LFCSP and 10-lead MSOP

APPLICATIONS

Automatic test equipment
Precision source-measure instruments
Data acquisition systems
Medical instrumentation
Aerospace instrumentation
Communications infrastructure equipment
Industrial control

FUNCTIONAL BLOCK DIAGRAMS

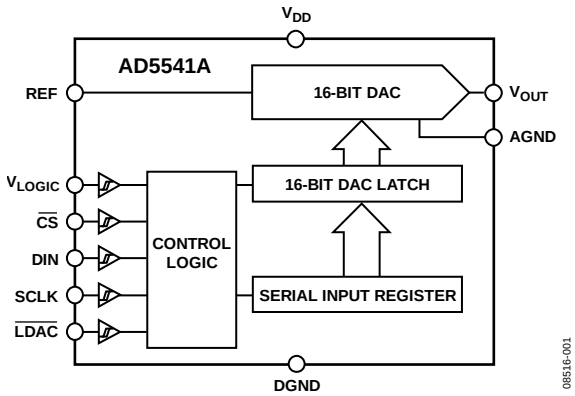

Figure 1. AD5541A

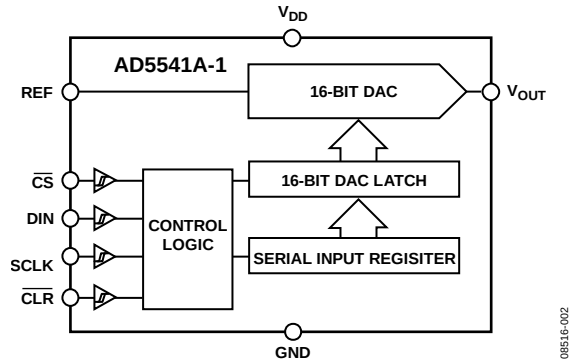

Figure 2. AD5541A-1

GENERAL DESCRIPTION

The AD5541A is a single, 16-bit, serial input, unbuffered voltage output digital-to-analog converter (DAC) that operates from a single 2.7 V to 5.5 V supply.

The DAC output range extends from 0 V to V_{REF} and is guaranteed monotonic, providing ±1 LSB INL accuracy at 16 bits without adjustment over the full specified temperature range of −40°C to +125°C. The AD5541A is available in a 3 mm × 3 mm, 10-lead LFCSP and 10-lead MSOP. The AD5541A-1 is available in a 3 mm × 3 mm, 8-lead LFCSP.

Offering unbuffered outputs, the AD5541A achieves a 1 µs settling time with low power consumption and low offset errors. Providing low noise performance of 11.8 nV/√Hz and low glitch, the AD5541A is suitable for deployment across multiple end systems.

The AD5541A uses a versatile 3-wire interface that is compatible with 50 MHz SPI, QSPI™, MICROWIRE™, and DSP interface standards.

Table 1. Related Devices

Part No.	Description
AD5040/AD5060	2.7 V to 5.5 V 14-/16-bit buffed output DACs
AD5541/AD5542	2.7 V to 5.5 V 16-bit voltage output DACs
AD5781/AD5791	18-/20-bit voltage output DACs
AD5024/AD5064	4.5 V to 5.5 V, 12-/16-bit quad channel DACs
AD5061	Single, 16-bit *nano*DAC, ±4 LSB INL, SOT-23
AD5542A	16-bit, bipolar, voltage output DAC

PRODUCT HIGHLIGHTS

1. 16-bit performance without adjustment.
2. 2.7 V to 5.5 V single operation.
3. Low 11.8 nV/√Hz noise spectral density.
4. Low 0.05 ppm/°C temperature drift.
5. 3 mm × 3 mm LFCSP and MSOP packaging.

Rev. B **Document Feedback**
Information furnished by Analog Devices is believed to be accurate and reliable. However, no responsibility is assumed by Analog Devices for its use, nor for any infringements of patents or other rights of third parties that may result from its use. Specifications subject to change without notice. No license is granted by implication or otherwise under any patent or patent rights of Analog Devices. Trademarks and registered trademarks are the property of their respective owners.

One Technology Way, P.O. Box 9106, Norwood, MA 02062-9106, U.S.A.
Tel: 781.329.4700 **©2010–2018 Analog Devices, Inc. All rights reserved.**
Technical Support **www.analog.com**

Downloaded from Arrow.com.

TABLE OF CONTENTS

Features ... 1
Applications ... 1
Functional Block Diagrams ... 1
General Description ... 1
Product Highlights ... 1
Revision History ... 2
Specifications ... 3
AC Characteristics ... 4
Timing Characteristics ... 5
Absolute Maximum Ratings ... 6
ESD Caution ... 6
Pin Configurations and Function Descriptions ... 7
Typical Performance Characteristics ... 9
Terminology ... 13
Theory of Operation ... 14
Digital-to-Analog Section ... 14
Serial Interface ... 14
Unipolar Output Operation ... 15
Output Amplifier Selection ... 15
Force Sense Amplifier Selection ... 16
Reference and Ground ... 16
Power-On Reset ... 16
Power Supply and Reference Bypassing ... 16
Applications Information ... 17
Microprocessor Interfacing ... 17
AD5541A to ADSP-BF531 Interface ... 17
AD5541A to SPORT Interface ... 17
Layout Guidelines ... 17
Galvanically Isolated Interface ... 17
Decoding Multiple DACs ... 18
Outline Dimensions ... 19
Ordering Guide ... 20

REVISION HISTORY

4/2018—Rev. A to Rev. B

Change to Output Noise Parameter, Table 3 ... 4
Changes to Figure 25 ... 12
Updated Outline Dimensions ... 19
Changes to Ordering Guide ... 20

3/2011—Rev. 0 to Rev. A

Added 10-Lead LFCSP and 8-Lead LFCSP ... Universal
Changes to Features, General Description, and Product Highlights Sections and Table 1 ... 1
Added Figure 2; Renumbered Sequentially ... 1
Changes to Logic Inputs Parameter, Table 1 ... 3
Changes to Figure 3 ... 5
Changes to Table 5 ... 6
Changes to Table 6 ... 7
Added Figure 5 and Figure 6 ... 8
Added Table 7; Renumbered Sequentially ... 8
Changes to Figure 15 ... 10
Changed V_{REF} to V_{REF} – 1 LSB in Unipolar Output Operation Section ... 15
Updated Outline Dimensions ... 18
Changes to Ordering Guide ... 18

7/2010—Revision 0: Initial Version

Downloaded from Arrow.com.

SPECIFICATIONS

V_{DD} = 2.7 V to 5.5 V, 2.5 V ≤ V_{REF} ≤ V_{DD}, AGND = DGND = 0 V, −40°C < T_A < +125°C,[1] unless otherwise noted.

Table 2.

Parameter	Min	Typ	Max	Unit	Test Condition
STATIC PERFORMANCE					
Resolution	16			Bits	
Relative Accuracy (INL)		±0.5	±1.0	LSB	B grade
		±0.5	±2.0	LSB	A grade
Differential Nonlinearity (DNL)		±0.5	±1.0	LSB	Guaranteed monotonic
Gain Error		0.5	±2	LSB	T_A = 25°C
			±3	LSB	−40°C < T_A < +85°C
			±4	LSB	−40°C < T_A < +125°C
Gain Error Temperature Coefficient		±0.1		ppm/°C	
Zero-Code Error		0.3	±0.7	LSB	T_A = 25°C
			±1.5	LSB	−40°C < T_A < +85°C
			±3	LSB	−40°C < T_A < +125°C
Zero-Code Temperature Coefficient		±0.05		ppm/°C	
DC Power Supply Rejection Ratio			±1	LSB	ΔV_{DD} ± 10%
OUTPUT CHARACTERISTICS[2]					
Output Voltage Range	0		V_{REF} − 1 LSB	V	Unipolar operation
DAC Output Impedance		6.25		kΩ	Tolerance typically 20%
DAC REFERENCE INPUT[3]					
Reference Input Range	2.0		V_{DD}	V	
Reference Input Resistance	9			kΩ	Unipolar operation
Reference Input Capacitance		26		pF	Code 0x0000
		26		pF	Code 0xFFFF
LOGIC INPUTS					
Input Current			±1	µA	
Input Low Voltage, V_{INL}			0.4	V	V_{LOGIC} = 1.8 V to 5.5 V
			0.8	V	V_{LOGIC} = 2.7 V to 5.5 V
Input High Voltage, V_{INH}	2.4			V	V_{LOGIC} = 4.5 V to 5.5 V
	1.8			V	V_{LOGIC} = 2.7 V to 3.6 V
	1.3			V	V_{LOGIC} = 1.8 V to 2.7 V
Input Capacitance[2]			10	pF	
Hysteresis Voltage[2]		0.15		V	
POWER REQUIREMENTS					
V_{DD}	2.7		5.5	V	All digital inputs at 0 V, V_{LOGIC}, or V_{DD}
I_{DD}		125	150	µA	V_{IH} = V_{LOGIC} or V_{DD} and V_{IL} = GND
V_{LOGIC}	1.8		5.5	V	
I_{LOGIC}		15	24	µA	All digital inputs at 0 V, V_{LOGIC}, or V_{DD}
Power Dissipation		0.625	0.825	mW	

[1] For 2.7 V ≤ V_{LOGIC} ≤ 5.5 V: −40°C < T_A < +125°C. For 1.8 V ≤ V_{LOGIC} ≤ 2.7 V: −40°C < T_A < +105°C.
[2] Guaranteed by design, but not subject to production test.
[3] Reference input resistance is code-dependent, minimum at 0x8555.

Downloaded from Arrow.com.

AC CHARACTERISTICS

V_{DD} = 2.7 V to 5.5 V, 2.5 V ≤ V_{REF} ≤ V_{DD}, AGND = DGND = 0 V, −40°C < T_A < +125°C, unless otherwise noted.

Table 3.

Parameter	Min	Typ	Max	Unit	Test Condition
Output Voltage Settling Time		1		µs	To ½ LSB of full scale, C_L = 10 pF
Slew Rate		17		V/µs	C_L = 10 pF, measured from 0% to 63%
Digital-to-Analog Glitch Impulse		1.1		nV-sec	1 LSB change around major carry
Reference −3 dB Bandwidth		2.2		MHz	All 1s loaded
Reference Feedthrough		1		mV p-p	All 0s loaded, V_{REF} = 1 V p-p at 100 kHz
Digital Feedthrough		0.2		nV-sec	
Signal-to-Noise Ratio		92		dB	
Spurious Free Dynamic Range		80		dB	Digitally generated sine wave at 1 kHz
Total Harmonic Distortion		74		dB	DAC code = 0xFFFF, frequency 10 kHz, V_{REF} = 2.5 V ± 1 V p-p
Output Noise Spectral Density		11.8		nV/√Hz	DAC code = 0x0000, frequency = 1 kHz
Output Noise		1.25		µV p-p	0.1 Hz to 10 Hz

Downloaded from Arrow.com.

TIMING CHARACTERISTICS

V_{DD} = 5 V, 2.5 V ≤ V_{REF} ≤ V_{DD}, V_{INH} = 90% of V_{LOGIC}, V_{INL} = 10% of V_{LOGIC}, AGND = DGND = 0 V, −40°C < T_A < +105°C, unless otherwise noted.

Table 4.

Parameter[1,2]	Limit at 1.8 ≤ V_{LOGIC} ≤ 2.7 V	Limit at 2.7 V ≤ V_{LOGIC} ≤ 5.5 V	Unit	Description
f_{SCLK}	14	50	MHz max	SCLK cycle frequency
t_1	70	20	ns min	SCLK cycle time
t_2	35	10	ns min	SCLK high time
t_3	35	10	ns min	SCLK low time
t_4	5	5	ns min	$\overline{CS}$ low to SCLK high setup
t_5	5	5	ns min	$\overline{CS}$ high to SCLK high setup
t_6	5	5	ns min	SCLK high to $\overline{CS}$ low hold time
t_7	10	5	ns min	SCLK high to $\overline{CS}$ high hold time
t_8	35	10	ns min	Data setup time
t_9	5	4	ns min	Data hold time (V_{INH} = 90% of V_{DD}, V_{INL} = 10% of V_{DD})
t_9	5	5	ns min	Data hold time (V_{INH} = 3 V, V_{INL} = 0 V)
t_{10}	20	20	ns min	$\overline{LDAC}$ pulse width
t_{11}	10	10	ns min	$\overline{CS}$ high to $\overline{LDAC}$ low setup
t_{12}	15	15	ns min	$\overline{CS}$ high time between active periods

[1] Guaranteed by design and characterization. Not production tested.
[2] All input signals are specified with $t_R = t_F$ = 1 ns/V and timed from a voltage level of (V_{INL} + V_{INH})/2.

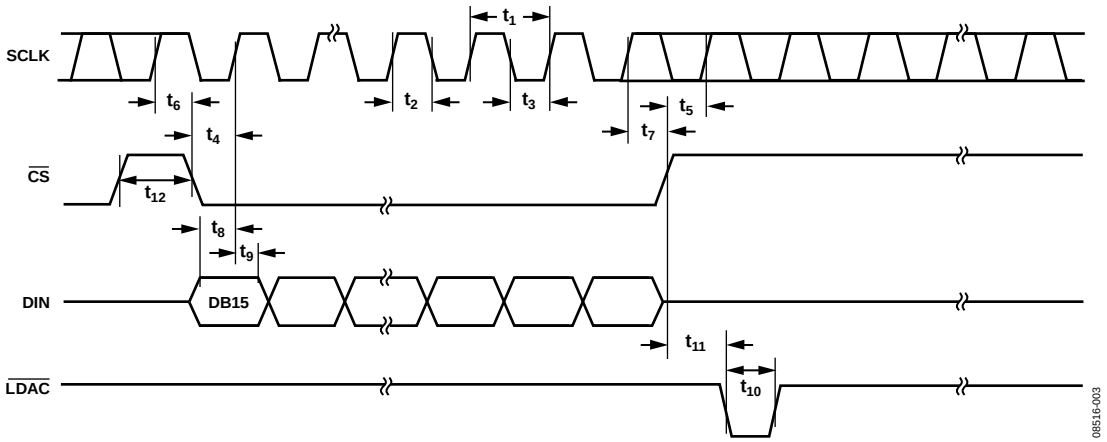

Figure 3. Timing Diagram

Downloaded from Arrow.com.

ABSOLUTE MAXIMUM RATINGS

T_A = 25°C, unless otherwise noted.

Table 5.

Parameter	Rating
V_{DD} to AGND	−0.3 V to +6 V
V_{LOGIC} to DGND	−0.3 V to +6 V
Digital Input Voltage to DGND	−0.3 V to V_{DD}/V_{LOGIC} + 0.3 V
V_{OUT} to AGND	−0.3 V to V_{DD} + 0.3 V
AGND to DGND	−0.3 V to +0.3 V
Input Current to Any Pin Except Supplies	±10 mA
Operating Temperature Range	
Industrial (A, B Versions)	−40°C to +125°C
Storage Temperature Range	−65°C to +150°C
Maximum Junction Temperature (T_J max)	150°C
Package Power Dissipation	(T_J max − T_A)/θ_{JA}
Thermal Impedance, θ_{JA}	
LFCSP (CP-10-9)	50°C/W
LFCSP (CP-8-11)	62°C/W
MSOP (RM-10)	135°C/W
Lead Temperature, Soldering	
Peak Temperature[1]	260°C
ESD[2]	5 kV

[1] As per JEDEC Standard 20.
[2] Human body model (HBM) classification.

Stresses at or above those listed under Absolute Maximum Ratings may cause permanent damage to the product. This is a stress rating only; functional operation of the product at these or any other conditions above those indicated in the operational section of this specification is not implied. Operation beyond the maximum operating conditions for extended periods may affect product reliability.

ESD CAUTION

ESD (electrostatic discharge) sensitive device. Charged devices and circuit boards can discharge without detection. Although this product features patented or proprietary protection circuitry, damage may occur on devices subjected to high energy ESD. Therefore, proper ESD precautions should be taken to avoid performance degradation or loss of functionality.

Downloaded from Arrow.com.

PIN CONFIGURATIONS AND FUNCTION DESCRIPTIONS

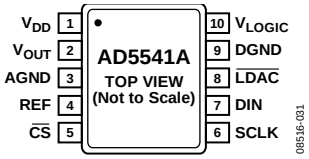

Figure 4. AD5541A 10-Lead MSOP Pin Configuration

Table 6. AD5541A Pin Function Descriptions

Pin No.	Mnemonic	Description
1	V_{DD}	Analog Supply Voltage.
2	V_{OUT}	Analog Output Voltage from the DAC.
3	AGND	Ground Reference Point for Analog Circuitry.
4	REF	Voltage Reference Input for the DAC. Connect to an external 2.5 V reference. The reference can range from 2 V to V_{DD}.
5	$\overline{CS}$	Logic Input Signal. The chip select signal is used to frame the serial data input.
6	SCLK	Clock Input. Data is clocked into the serial input register on the rising edge of SCLK. The duty cycle must be between 40% and 60%.
7	DIN	Serial Data Input. This device accepts 16-bit words. Data is clocked into the serial input register on the rising edge of SCLK.
8	$\overline{LDAC}$	$\overline{LDAC}$ Input. When this input is taken low, the DAC register is simultaneously updated with the contents of the serial register data.
9	DGND	Digital Ground. Ground reference for digital circuitry.
10	V_{LOGIC}	Logic Power Supply.

Downloaded from Arrow.com.

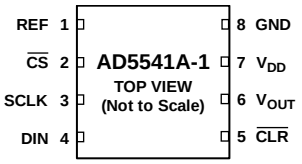

NOTES
1. FOR INCREASED RELIABILITY OF THE SOLDER JOINTS AND MAXIMUM THERMAL CAPABILITY, IT IS RECOMMENDED THAT THE PAD BE SOLDERED TO THE SUBSTRATE, GND.

08516-004

Figure 5. AD5541A-1 8-Lead LFCSP Pin Configuration

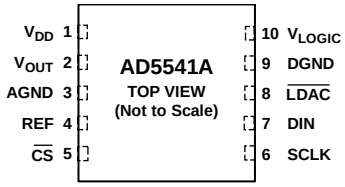

NOTES
1. FOR INCREASED RELIABILITY OF THE SOLDER JOINTS AND MAXIMUM THERMAL CAPABILITY, IT IS RECOMMENDED THAT THE PAD BE SOLDERED TO THE SUBSTRATE, GND.

08516-005

Figure 6. AD5541A 10-Lead LFCSP Pin Configuration

Table 7. AD5541A-1 and AD5541A Pin Function Descriptions

Pin No.			
8-Lead LFCSP	**10-Lead LFCSP**	**Mnemonic**	**Description**
1	4	REF	Voltage Reference Input for the DAC. Connect to an external 2.5 V reference. The reference can range from 2 V to V_{DD}.
2	5	$\overline{CS}$	Logic Input Signal. The chip select signal is used to frame the serial data input.
3	6	SCLK	Clock Input. Data is clocked into the serial input register on the rising edge of SCLK. Duty cycle must be between 40% and 60%.
4	7	DIN	Serial Data Input. This device accepts 16-bit words. Data is clocked into the serial input register on the rising edge of SCLK.
5	N/A[1]	$\overline{CLR}$	Asynchronous Clear Input. The $\overline{CLR}$ input is falling edge sensitive. When $\overline{CLR}$ is low, all $\overline{LDAC}$ pulses are ignored. When $\overline{CLR}$ is activated, the serial input register and the DAC register are cleared to zero scale.
6	2	V_{OUT}	Analog Output Voltage from the DAC.
N/A[1]	9	DGND	Digital Ground. Ground reference for digital circuitry.
7	1	V_{DD}	Analog Supply Voltage.
8	N/A[1]	GND	Ground Reference Point for Both Analog and Digital Circuitry.
N/A[1]	3	AGND	Ground Reference Point for Analog Circuitry.
N/A[1]	10	V_{LOGIC}	Logic Power Supply.
N/A[1]	8	$\overline{LDAC}$	$\overline{LDAC}$ Input. When this input is taken low, the DAC register is simultaneously updated with the contents of the serial input register.
		EPAD	Exposed Pad. For increased reliability of the solder joints and maximum thermal capability, it is recommended that the pad be soldered to the substrate, GND.

[1] N/A means not applicable.

Downloaded from Arrow.com.

TYPICAL PERFORMANCE CHARACTERISTICS

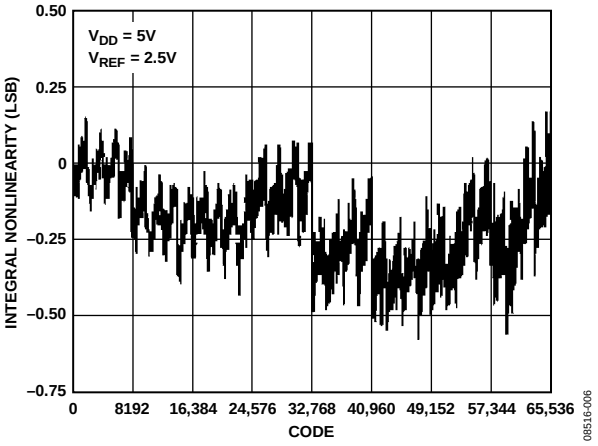

Figure 7. Integral Nonlinearity vs. Code

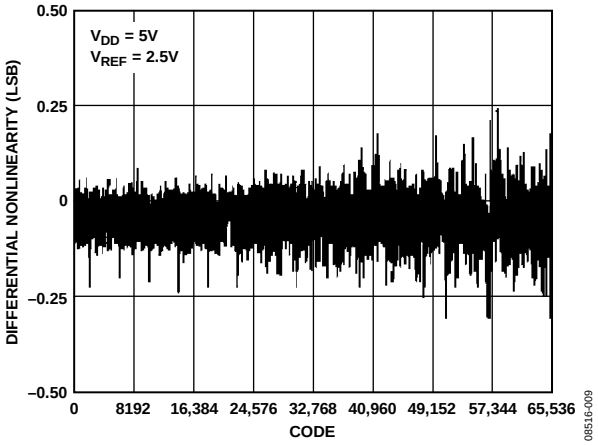

Figure 10. Differential Nonlinearity vs. Code

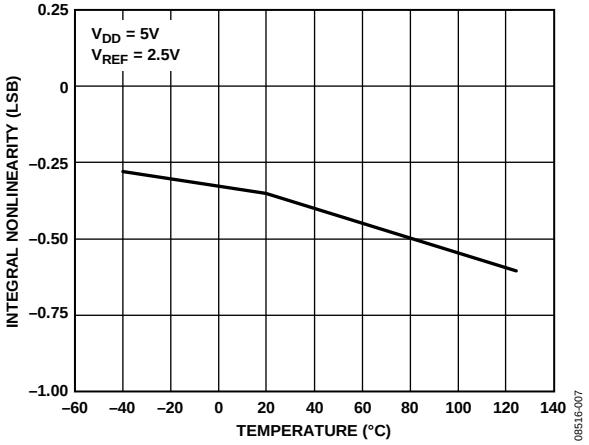

Figure 8. Integral Nonlinearity vs. Temperature

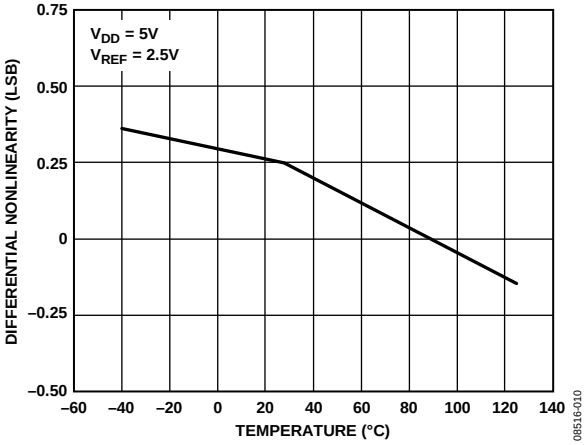

Figure 11. Differential Nonlinearity vs. Temperature

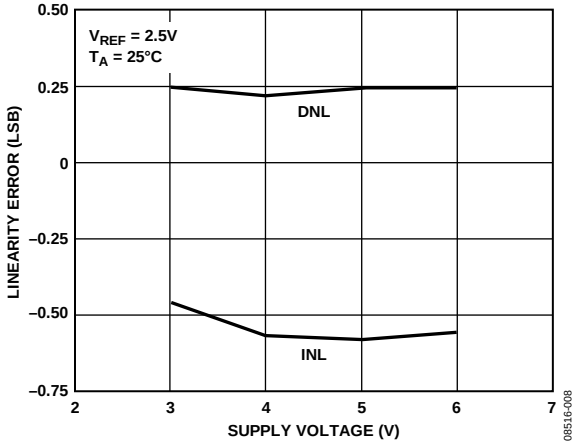

Figure 9. Linearity Error vs. Supply Voltage

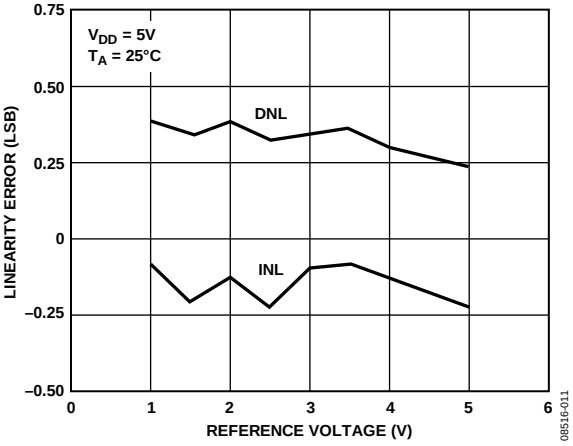

Figure 12. Linearity Error vs. Reference Voltage

Downloaded from Arrow.com.

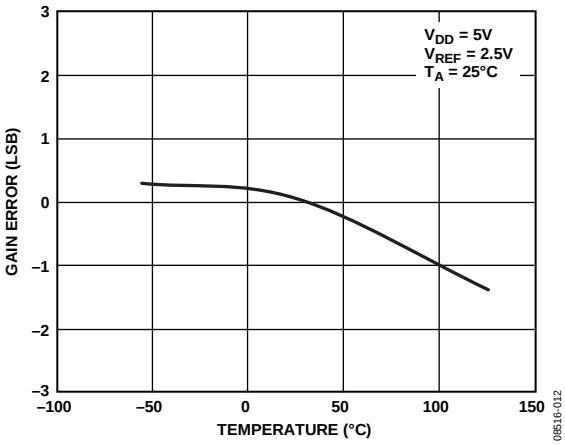

Figure 13. Gain Error vs. Temperature

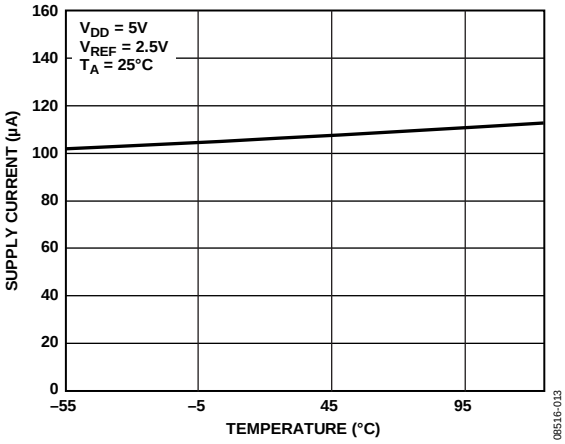

Figure 14. Supply Current vs. Temperature

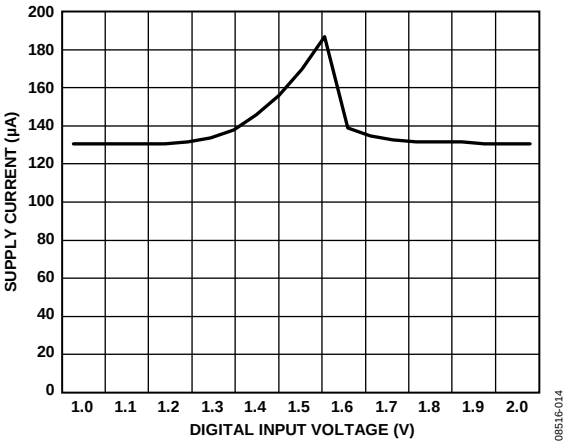

Figure 15. Supply Current vs. Digital Input Voltage

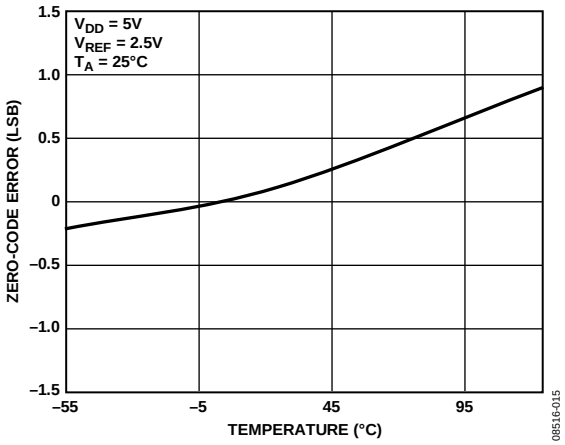

Figure 16. Zero-Code Error vs. Temperature

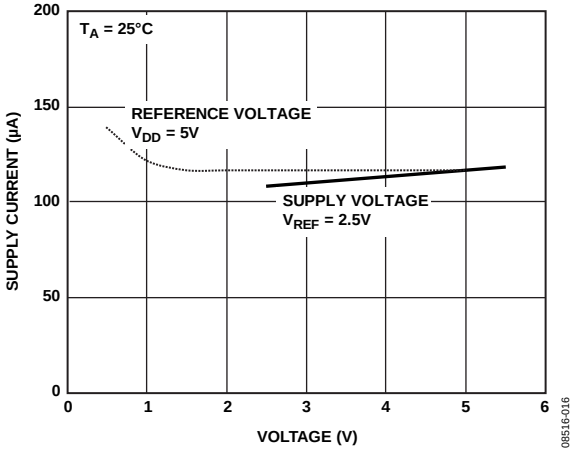

Figure 17. Supply Current vs. Reference Voltage or Supply Voltage

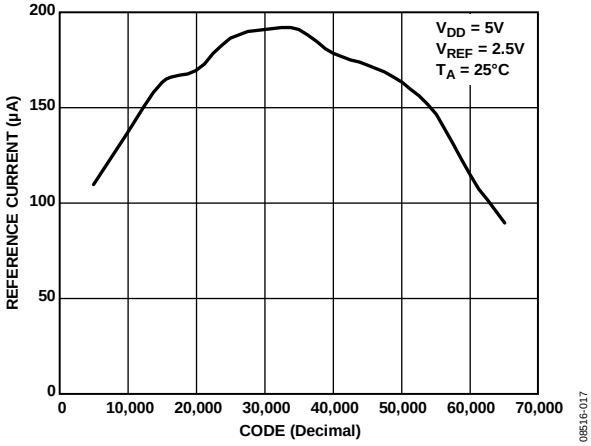

Figure 18. Reference Current vs. Code

Downloaded from Arrow.com.

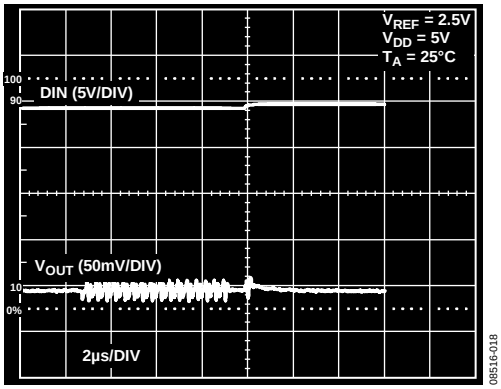

Figure 19. Digital Feedthrough

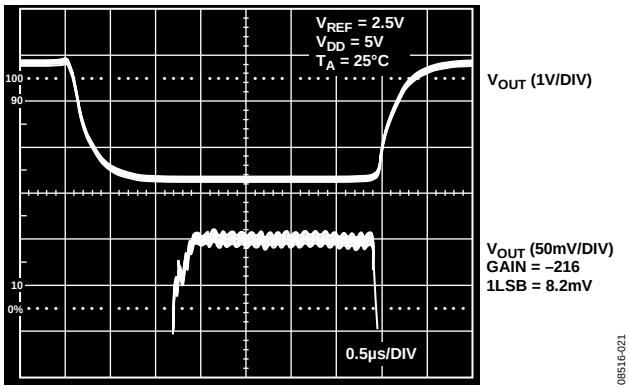

Figure 22. Small Signal Settling Time

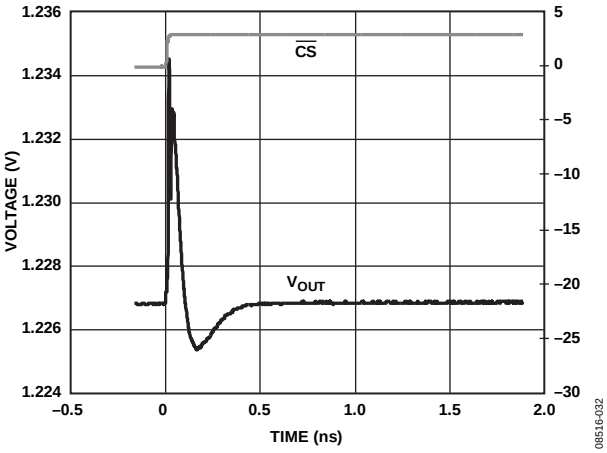

Figure 20. Digital-to-Analog Glitch Impulse

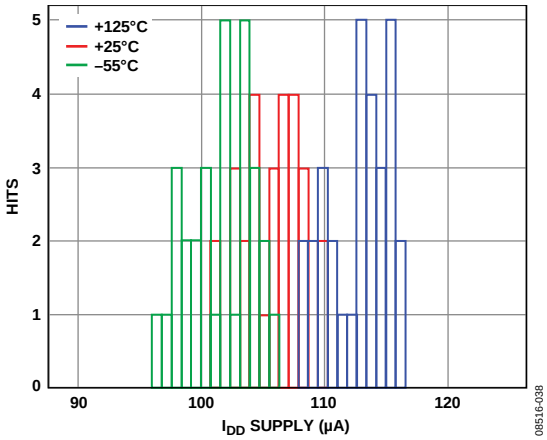

Figure 23. Analog Supply Current Histogram

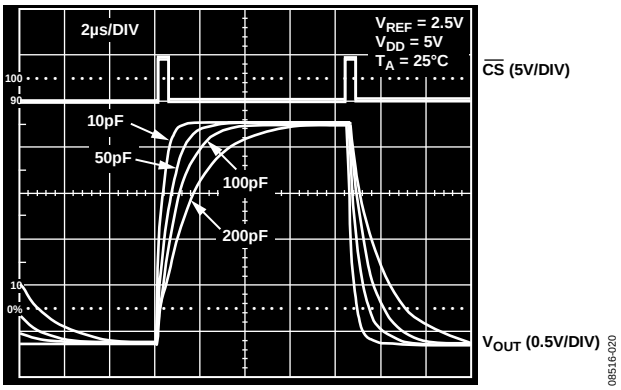

Figure 21. Large Signal Settling Time

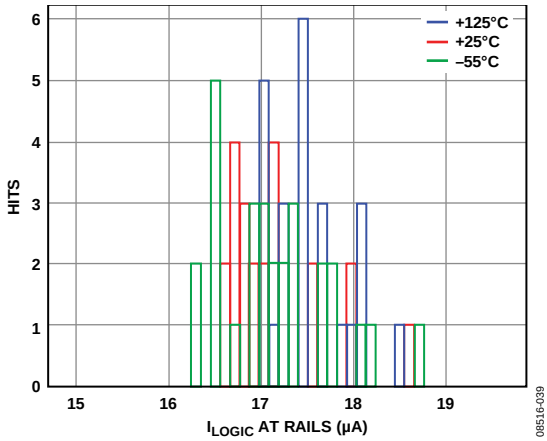

Figure 24. Digital Supply Current Histogram

Downloaded from Arrow.com.

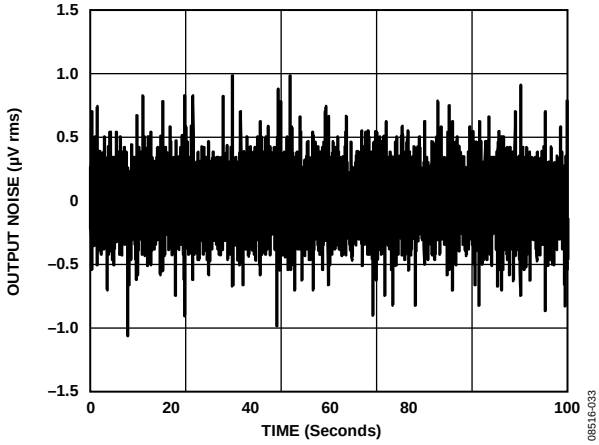

Figure 25. 0.1 Hz to 10 Hz Output Noise

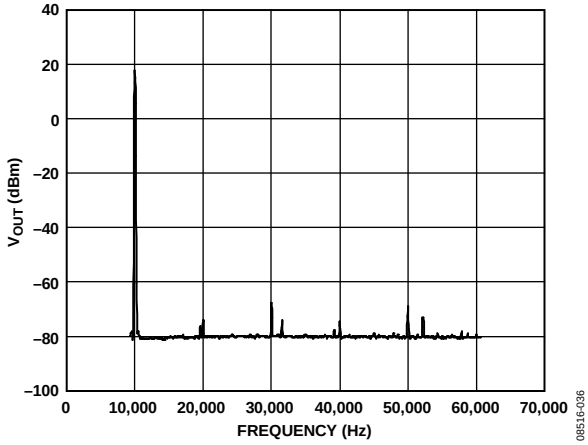

Figure 28. Total Harmonic Distortion

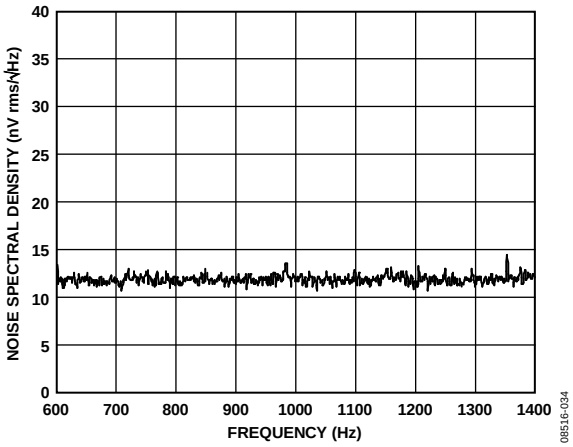

Figure 26. Noise Spectral Density vs. Frequency,1 kHz

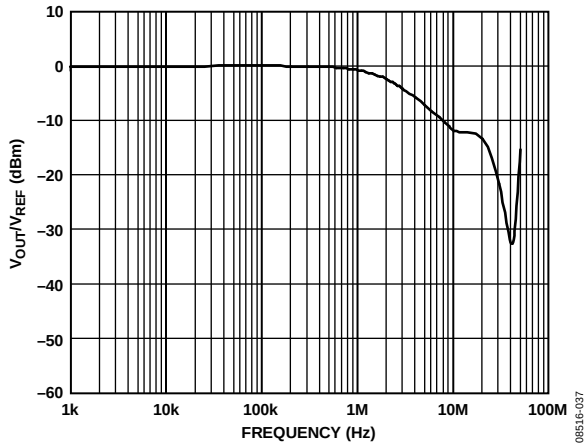

Figure 29. Multiplying Bandwidth

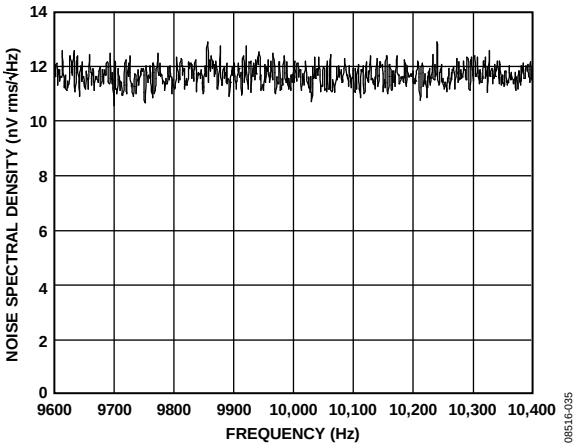

Figure 27. Noise Spectral Density vs. Frequency, 10 kHz

Downloaded from Arrow.com.

TERMINOLOGY

Relative Accuracy or Integral Nonlinearity (INL)
For the DAC, relative accuracy or INL is a measure of the maximum deviation, in LSBs, from a straight line passing through the endpoints of the DAC transfer function. A typical INL vs. code plot is shown in Figure 7.

Differential Nonlinearity (DNL)
DNL is the difference between the measured change and the ideal 1 LSB change between any two adjacent codes. A specified differential nonlinearity of ±1 LSB maximum ensures monotonicity. A typical DNL vs. code plot is shown in Figure 10.

Gain Error
Gain error is the difference between the actual and ideal analog output range, expressed as a percent of the full-scale range. It is the deviation in slope of the DAC transfer characteristic from ideal.

Gain Error Temperature Coefficient
Gain error temperature coefficient is a measure of the change in gain error with changes in temperature. It is expressed in ppm/°C.

Zero-Code Error
Zero-code error is a measure of the output error when zero code is loaded to the DAC register.

Zero-Code Temperature Coefficient
This is a measure of the change in zero-code error with a change in temperature. It is expressed in mV/°C.

Digital-to-Analog Glitch Impulse
Digital-to-analog glitch impulse is the impulse injected into the analog output when the input code in the DAC register changes state. It is normally specified as the area of the glitch in nV-sec and is measured when the digital input code is changed by 1 LSB at the major carry transition. A digital-to-analog glitch impulse plot is shown in Figure 20.

Digital Feedthrough
Digital feedthrough is a measure of the impulse injected into the analog output of the DAC from the digital inputs of the DAC, but it is measured when the DAC output is not updated. $\overline{CS}$ is held high while the SCLK and DIN signals are toggled. It is specified in nV-sec and is measured with a full-scale code change on the data bus, that is, from all 0s to all 1s and vice versa. A typical digital feedthrough plot is shown in Figure 19.

Power Supply Rejection Ratio (PSRR)
PSRR indicates how the output of the DAC is affected by changes in the power supply voltage. The power supply rejection ratio is expressed in terms of percent change in output per percent change in V_{DD} for full-scale output of the DAC. V_{DD} is varied by ±10%.

Reference Feedthrough
Reference feedthrough is a measure of the feedthrough from the V_{REF} input to the DAC output when the DAC is loaded with all 0s. A 100 kHz, 1 V p-p is applied to V_{REF}. Reference feedthrough is expressed in mV p-p.

Downloaded from Arrow.com.

THEORY OF OPERATION

The AD5541A is a single, 16-bit, serial input, voltage output DAC. It operates from a single supply ranging from 2.7 V to 5 V and consumes typically 125 µA with a supply of 5 V. Data is written to these devices in a 16-bit word format, via a 3- or 4-wire serial interface. To ensure a known power-up state, this part is designed with a power-on reset function. The output is reset to 0 V.

DIGITAL-TO-ANALOG SECTION

The DAC architecture consists of two matched DAC sections. A simplified circuit diagram is shown in Figure 30. The DAC architecture of the AD5541A is segmented. The four MSBs of the 16-bit data-word are decoded to drive 15 switches, E1 to E15. Each switch connects one of 15 matched resistors to either AGND or V_{REF}. The remaining 12 bits of the data-word drive the S0 to S11 switches of a 12-bit voltage mode R-2R ladder network.

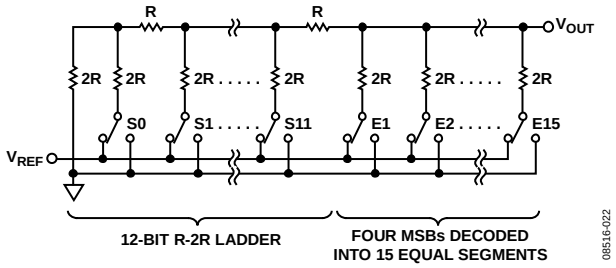

Figure 30. DAC Architecture

With this type of DAC configuration, the output impedance is independent of code, whereas the input impedance seen by the reference is heavily code dependent. The output voltage is dependent on the reference voltage, as shown in the following equation:

$$V_{OUT} = \frac{V_{REF} \times D}{2^N}$$

where:
D is the decimal data-word loaded to the DAC register.
N is the resolution of the DAC.

For a reference of 2.5 V, the equation simplifies to the following:

$$V_{OUT} = \frac{2.5 \times D}{65{,}536}$$

This gives a V_{OUT} of 1.25 V with midscale loaded and 2.5 V with full scale loaded to the DAC.

The LSB size is V_{REF}/65,536.

SERIAL INTERFACE

The AD5541A is controlled by a versatile 3- or 4-wire serial interface that operates at clock rates of up to 50 MHz and is compatible with SPI, QSPI, MICROWIRE, and DSP interface standards. The timing diagram is shown in Figure 3. The AD5541A has a separate serial input register from the 16-bit DAC register that allows preloading of a new data value into the serial input register without disturbing the present DAC output voltage.

Input data is framed by the chip select input, $\overline{CS}$. After a high-to-low transition on $\overline{CS}$, data is shifted synchronously and latched into the serial input register on the rising edge of the serial clock, SCLK. After 16 data bits have been loaded into the serial input register, a low-to-high transition on $\overline{CS}$ transfers the contents of the shift register to the DAC register if $\overline{LDAC}$ is held low. If $\overline{LDAC}$ is high at this point, a low-to-high transition on $\overline{CS}$ transfers the contents into the serial input register only. After a new value is fully loaded in the serial input register, it can be asynchronously transferred to the DAC register by strobing the $\overline{LDAC}$ pin. Data is loaded MSB first in 16-bit words. Data can be loaded to the part only while $\overline{CS}$ is low.

Downloaded from Arrow.com.

UNIPOLAR OUTPUT OPERATION

This DAC is capable of driving unbuffered loads of 60 kΩ. Unbuffered operation results in low supply current, typically 300 µA, and a low offset error. The AD5541A provides a unipolar output swing ranging from 0 V to V_{REF} − 1 LSB. Figure 31 shows a typical unipolar output voltage circuit. The code table for this mode of operation is shown in Table 8. The example includes the ADR421 2.5 V reference and the AD8628 low offset and zero-drift reference buffer.

Table 8. Unipolar Code Table

DAC Latch Contents MSB LSB	Analog Output
1111 1111 1111 1111	V_{REF} × (65,535/65,536)
1000 0000 0000 0000	V_{REF} × (32,768/65,536) = ½ V_{REF}
0000 0000 0000 0001	V_{REF} × (1/65,536)
0000 0000 0000 0000	0 V

Assuming a perfect reference, the unipolar worst-case output voltage can be calculated from the following equation:

$$V_{OUT-UNI} = \frac{D}{2^{16}} \times \left(V_{REF} + V_{GE}\right) + V_{ZSE} + INL$$

where:
$V_{OUT-UNI}$ is the unipolar mode worst-case output.
D is the code loaded to DAC.
V_{REF} is the reference voltage applied to the part.
V_{GE} is the gain error in volts.
V_{ZSE} is the zero-scale error in volts.
INL is the integral nonlinearity in volts.

OUTPUT AMPLIFIER SELECTION

For bipolar mode, a precision amplifier should be used and supplied from a dual power supply. This provides the ±V_{REF} output. In a single-supply application, selection of a suitable op amp may be more difficult because the output swing of the amplifier does not usually include the negative rail, in this case, AGND. This can result in some degradation of the specified performance unless the application does not use codes near zero.

The selected op amp must have a very low offset voltage (the DAC LSB is 38 µV with a 2.5 V reference) to eliminate the need for output offset trims. Input bias current should also be very low because the bias current, multiplied by the DAC output impedance (approximately 6 kΩ), adds to the zero-code error. Rail-to-rail input and output performance is required. For fast settling, the slew rate of the op amp should not impede the settling time of the DAC. Output impedance of the DAC is constant and code independent, but to minimize gain errors, the input impedance of the output amplifier should be as high as possible. The amplifier should also have a 3 dB bandwidth of 1 MHz or greater. The amplifier adds another time constant to the system, thus increasing the settling time of the output. A higher 3 dB amplifier bandwidth results in a shorter effective settling time of the combined DAC and amplifier.

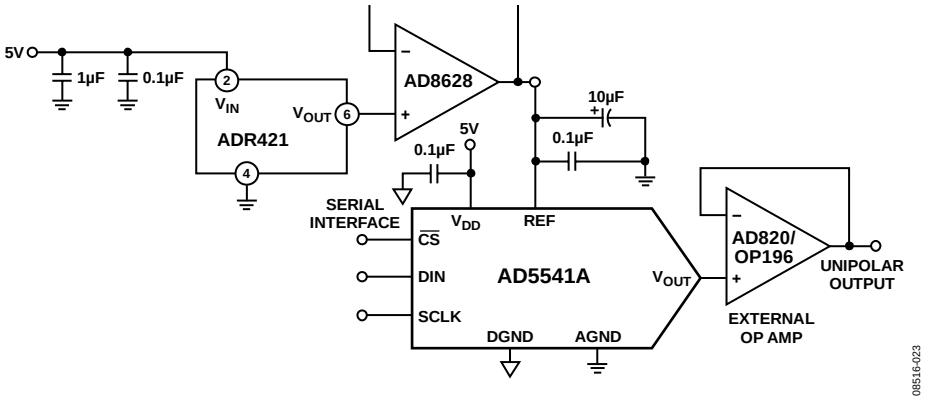

Figure 31. Unipolar Output

Downloaded from Arrow.com.

FORCE SENSE AMPLIFIER SELECTION

Use single-supply, low noise amplifiers. A low output impedance at high frequencies is preferred because the amplifiers must be able to handle dynamic currents of up to ±20 mA.

REFERENCE AND GROUND

Because the input impedance is code dependent, drive the reference pin from a low impedance source. The AD5541A operates with a voltage reference ranging from 2 V to V_{DD}. References below 2 V result in reduced accuracy. The full-scale output voltage of the DAC is determined by the reference. Table 8 outlines the analog output voltage or particular digital codes.

If the application does not require separate force and sense lines, tie the lines close to the package to minimize voltage drops between the package leads and the internal die.

POWER-ON RESET

The AD5541A has a power-on reset function to ensure that the output is at a known state on power-up. On power-up, the DAC register contains all 0s until the data is loaded from the serial register. However, the serial register is not cleared on power-up; therefore, its contents are undefined. When loading data initially to the DAC, 16 bits or more should be loaded to prevent erroneous data appearing on the output. If more than 16 bits are loaded, the last 16 are kept, and if less than 16 bits are loaded, bits remain from the previous word. If the AD5541A must be interfaced with data shorter than 16 bits, pad the data with 0s at the LSBs.

POWER SUPPLY AND REFERENCE BYPASSING

For accurate high resolution performance, it is recommended that the reference and supply pins be bypassed with a 10 µF tantalum capacitor in parallel with a 0.1 µF ceramic capacitor.

Downloaded from Arrow.com.

APPLICATIONS INFORMATION

MICROPROCESSOR INTERFACING

Microprocessor interfacing to the AD5541A is via a serial bus that uses standard protocol that is compatible with DSP processors and microcontrollers. The communications channel requires a 3- or 4-wire interface consisting of a clock signal, a data signal, and a synchronization signal. The AD5541A requires a 16-bit data-word with data valid on the rising edge of SCLK.

AD5541A TO ADSP-BF531 INTERFACE

The SPI interface of the AD5541A is designed to be easily connected to industry-standard DSPs and microcontrollers. Figure 32 shows how the AD5541A can be connected to the Analog Devices, Inc., Blackfin® DSP. The Blackfin has an integrated SPI port that can be connected directly to the SPI pins of the AD5541A.

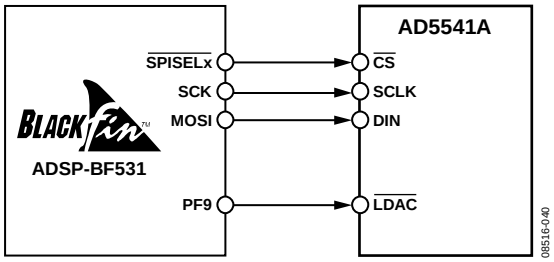

Figure 32. AD5541A to ADSP-BF531 Interface

AD5541A TO SPORT INTERFACE

The Analog Devices ADSP-BF527 has one SPORT serial port. Figure 33 shows how one SPORT interface can be used to control the AD5541A.

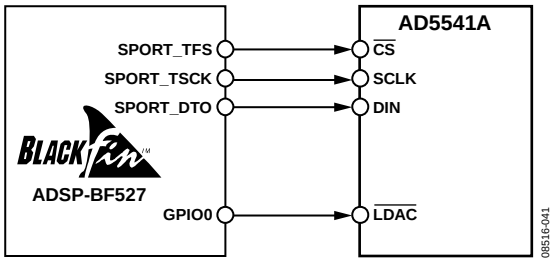

Figure 33. AD5541A to SPORT Interface

LAYOUT GUIDELINES

In any circuit where accuracy is important, careful consideration of the power supply and ground return layout helps to ensure the rated performance. Design the printed circuit board (PCB) on which the AD5541A is mounted so that the analog and digital sections are separated and confined to certain areas of the board. If the AD5541A is in a system where multiple devices require an analog ground-to-digital ground connection, make the connection at one point only. Establish the star ground point as close as possible to the device.

The AD5541A should have ample supply bypassing of 10 µF in parallel with 0.1 µF on each supply located as close to the package as possible, ideally right up against the device. The 10 µF capacitors are the tantalum bead type. The 0.1 µF capacitor should have low effective series resistance (ESR) and low effective series inductance (ESI), such as the common ceramic types, which provide a low impedance path to ground at high frequencies to handle transient currents due to internal logic switching.

GALVANICALLY ISOLATED INTERFACE

In many process control applications, it is necessary to provide an isolation barrier between the controller and the unit being controlled to protect and isolate the controlling circuitry from any hazardous common-mode voltages that may occur. iCoupler® products from Analog Devices provide voltage isolation in excess of 2.5 kV. The serial loading structure of the AD5541A makes the part ideal for isolated interfaces because the number of interface lines is kept to a minimum. Figure 34 shows a 4-channel isolated interface to the AD5541A using an ADuM1400. For further information, visit http://www.analog.com/icouplers.

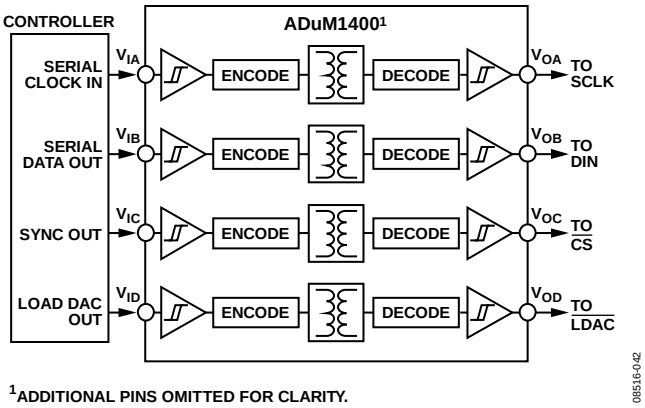

Figure 34. Isolated Interface

Downloaded from Arrow.com.

DECODING MULTIPLE DACS

The $\overline{CS}$ pin of the AD5541A can be used to select one of a number of DACs. All devices receive the same serial clock and serial data, but only one device receives the $\overline{CS}$ signal at any one time. The DAC addressed is determined by the decoder. There is some digital feedthrough from the digital input lines. Using a burst clock minimizes the effects of digital feedthrough on the analog signal channels. Figure 35 shows a typical circuit.

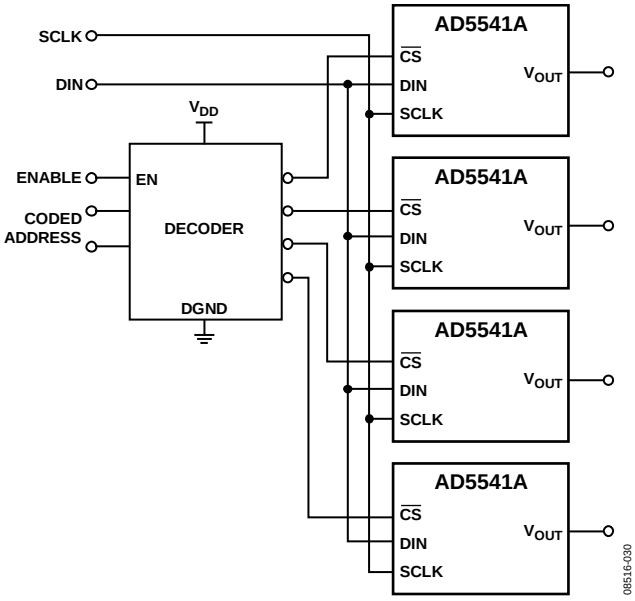

Figure 35. Addressing Multiple DACs

Downloaded from Arrow.com.

OUTLINE DIMENSIONS

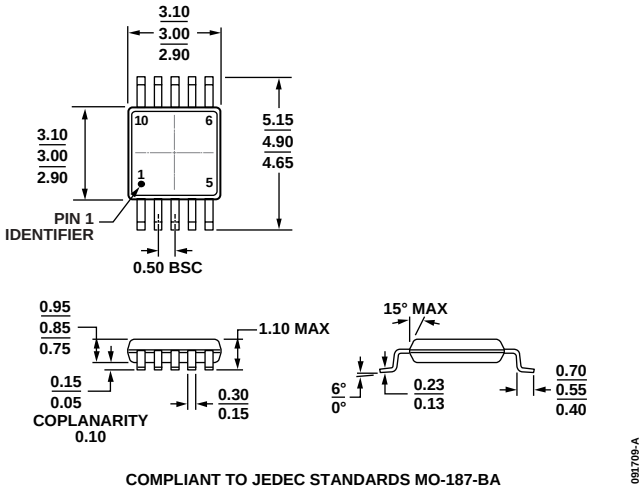

Figure 36. 10-Lead Mini Small Outline Package [MSOP]
(RM-10)
Dimensions shown in millimeters

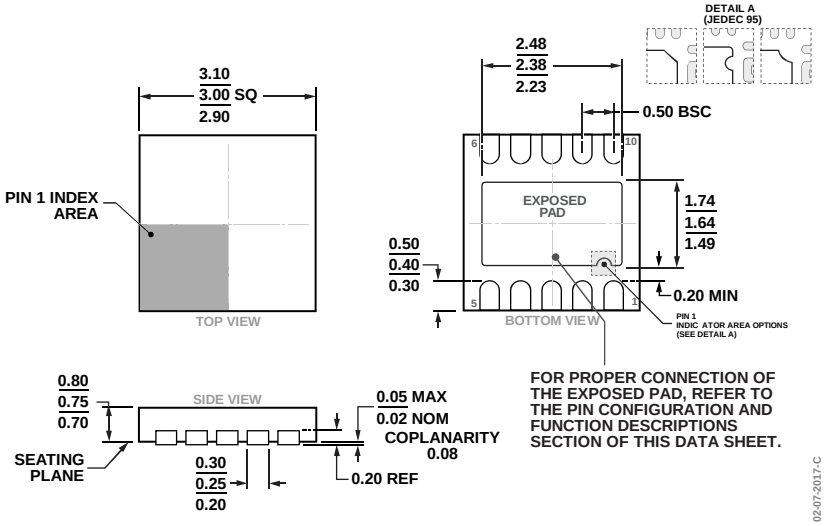

Figure 37. 10-Lead Lead Frame Chip Scale Package [LFCSP]
3 mm × 3 mm Body and 0.75 mm Package Height
(CP-10-9)
Dimensions shown in millimeters

Downloaded from Arrow.com.

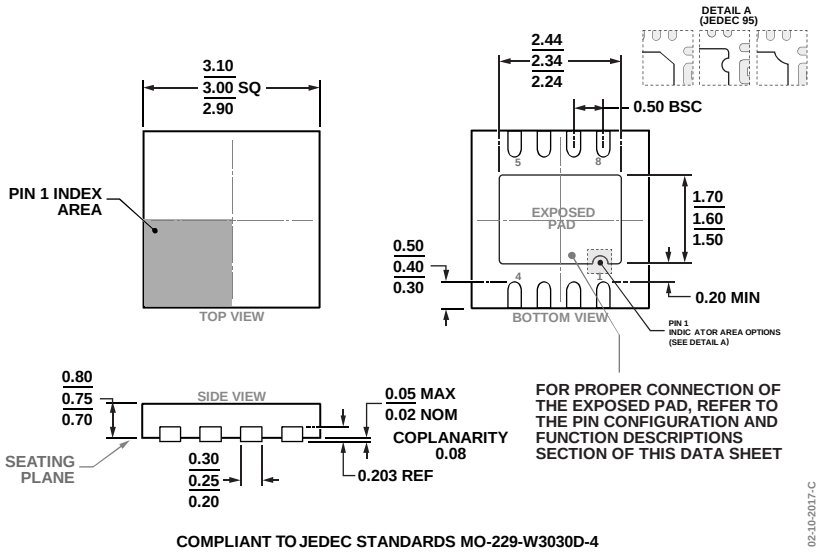

Figure 38. 8-Lead Lead Frame Chip Scale Package [LFCSP]
3 mm × 3 mm Body and 0.75 mm Package Height
(CP-8-11)
Dimensions shown in millimeters

ORDERING GUIDE

Model[1]	INL	DNL	Power-On Reset to Code	Temperature Range	Package Description	Package Option	Marking Code
AD5541ABRMZ	±1 LSB	±1 LSB	Zero Scale	−40°C to +125°C	10-Lead MSOP	RM-10	DEQ
AD5541ABRMZ-REEL7	±1 LSB	±1 LSB	Zero Scale	−40°C to +125°C	10-Lead MSOP	RM-10	DEQ
AD5541AARMZ	±2 LSB	±1 LSB	Zero Scale	−40°C to +125°C	10-Lead MSOP	RM-10	DER
AD5541AARMZ-REEL7	±2 LSB	±1 LSB	Zero Scale	−40°C to +125°C	10-Lead MSOP	RM-10	DER
AD5541AACPZ-REEL7	±2 LSB	±1 LSB	Zero Scale	−40°C to +125°C	10-Lead LFCSP	CP-10-9	DER
AD5541ABCPZ-REEL7	±1 LSB	±1 LSB	Zero Scale	−40°C to +125°C	10-Lead LFCSP	CP-10-9	DEQ
AD5541ABCPZ-500RL7	±1 LSB	±1 LSB	Zero Scale	−40°C to +125°C	10-Lead LFCSP	CP-10-9	DEQ
AD5541ABCPZ-1-RL7	±1 LSB	±1 LSB	Zero Scale	−40°C to +125°C	8-Lead LFCSP	CP-8-11	DFG
EVAL-AD5541ASDZ					AD5541A Evaluation Board		

[1] Z = RoHS Compliant Part.

©2010–2018 Analog Devices, Inc. All rights reserved. Trademarks and registered trademarks are the property of their respective owners.
D08516-0-4/18(B)

Downloaded from Arrow.com.