Crystal Units
Surface Mount Type CX5032SB (CX-96F)

KYOCERA

5.0×3.2mm for Mobile Communications

RoHS Compliant

Features

- Reference frequency for telecommunication systems
- Reflow compatible
- Using ceramic package resulting in high reliability
- Small and low profile

Applications

- Mobile Communications, Bluetooth®, Wireless LAN
- Car audio and accessories

* Bluetooth® Trademarks are owned by Bluetooth SIG Inc.

How to Order

CX5032SB 26000 □□ □ □ □ □□
① ② ③ ④ ⑤ ⑥ ⑦

① Series
② Frequency
③ Load Capacitance

D0	8 pF
F0	10 pF
H0	12 pF
S0	Series

④ Frequency Tolerance

F	$\pm10\times10^{-6}$
G	$\pm15\times10^{-6}$

⑤ Operating Temp. Range ⑥ Frequency Temp. Stability

FF	−20 to +70°C	$\pm10\times10^{-6}$
LJ	−30 to +85°C	$\pm15\times10^{-6}$

⑦ Individual Specification

Packaging (Tape & Reel 5000/ 1000 pcs./ reel)

Specifications

Item	Symbol	Specification		Units	Remarks
Frequency Range	f_{nom}	9800 to 50000	50 to 80 (MHz)	kHz	
Overtone Order	OT	Fundamental	3rd. Overtone	—	
Load Capacitance	CL	8		pF	
Frequency Tolerance	f_{tol}	±10		$\times10^{-6}$	25°C±3°C
Motional Series Resistance	R1	Table 1		ohm	
Drive Level	DL	Table 2		μW	
Operating Temp. Range	T_{use}	−30 to +85		°C	
Storage Temp. Range	T_{stg}	−40 to +85		°C	
Frequency Temp. Characteristics	f_{tem}	±15		$\times10^{-6}$	Freq. deviation from the value at 25°C

• Please contact us for other specifications.

Table1 Motional Series Resistance

Frequency Range	Motional Series Resistance
$9800\le f_{nom}<10000$kHz	150Ω max.
$10000\le f_{nom}<12000$kHz	80Ω max.
$12000\le f_{nom}<26000$kHz	50Ω max.
$26000\le f_{nom}\le50000$kHz	40Ω max.
*$50\le f_{nom}\le80$ (MHz)	80Ω max.

* 3rd Overtone

Table2 Level of Drive

Frequency Range	Level of Drive
$9800\le f_{nom}\le50000$kHz	10μW (100μW max.)
$50\le f_{nom}\le80$ (MHz)	

Dimensions

(Unit: mm)

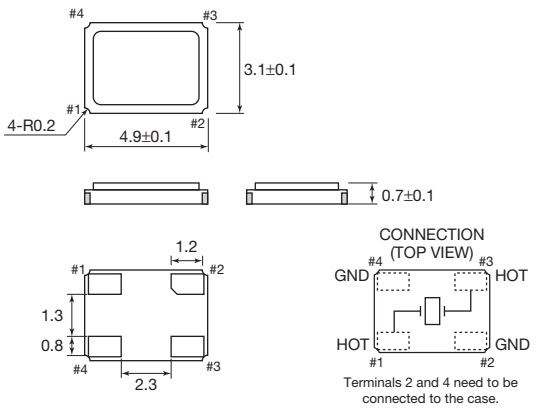

Recommended Land Pattern

(Unit: mm)

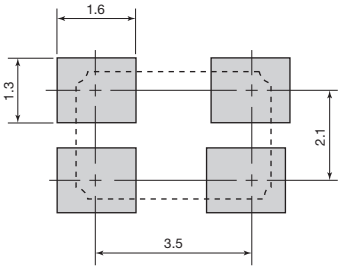

Downloaded from Arrow.com.